CASE CARTRIDGE, 37 MM
M 15 AND M 17

DESCRIPTION OF MANUFACTURE
CASE, CARTRIDGE, 37MM., M16 & M17

OFFICE OF
THE CHIEF OF ORDNANCE
U.S. ARMY
MAY 1, 1940

The information contained herein has been prepared at Frankford Arsenal and is based upon the practice used by that arsenal inthe manufacture of Cases, Cartridge 37 mm. M16 and M17.

The information has been compiled for use as a guide in connection with the preparation of plans for the war-time production of this item, and as an aid to manufacturers showing a possible method of procedure in the event of actual production in an emergency.

The Ordnance Department, in furnishing the information contained herein, accepts no responsibility either in connection with the use of recommended features and processes, or such operations as may be covered by live patents.

SUBMITTED BY:

W. P. BOATWRIGHT
Colonel, Ord. Dept.
Commanding Officer
Frankford Arsenal

APPROVED:

C. T. HARRIS, JR.
Brigadier General
Assistant to the Chief of Ordnance
Chief of Industrial Service

PRELIMINARY SURVEY

COVER SHEET

DATE 5-1-40

Revision

Sheet of sheets

PLANT

ADDRESS

Plant Hours per Month

Gage Design Hours Available

Tool Design Hours Available

Toolmaker Hours Available

Gagemaker Hours Available

Present Capacity per Month

Production Assigned per Month

Deliveries start in

ITEM, SUB ASSEMBLY or COMPONENT Case, Cartridge, 37 mm. M16 & M17 Drawings 71-2-96 & 71-2-100

Based on Production of per Month

Tool Design Hours Required

Gage Design Hours Required

Toolmaker Hours Required (1 set) 4000

Toolmaker Hours Req'd. (Prod. per month)

Gagemaker Hours Required (1 set) 1000

Gagemaker Hours Req'd (Prod. per month)

Basis – 10 hrs. per day – 25 Days

EQUIPMENT SHORTAGES

ARSENAL REMARKS

Toolmaker Hours listed above do not include the time required in the manufacture of raw or semi-finished materials such as bar stock, forgings and castings.

Gages mentioned herein are working gages only.

Toolmaker and gagemaker hours include only special tools and gages. Standard tools and gages which may be procured from firms specializing in certain types are not included, such as drills, taps, dies, thread gages, snap gages, plug gages, etc.

Estimated number of government inspectors required for production of 1,250,000 Cases per month 66.

GENERAL INFORMATION

In addition to this Description of Manufacture, the contractor should be provided with a set of specifications and drawings for this case. Drawing of the case is included in this Description but should be checked carefully to see that it is the latest revised copy. If the revision dates check, this drawing should enable a manufacturer to proceed satisfactorily in default of the regular drawing. If the revision dates do not check, all tools and gages contained herein pertaining to the revised dimensions should be changed to suit.

In the manufacture of this cartridge case, there are certain considerations which are particularly important for personnel to bear in mind.

(1) When a press is set up, care should be taken to see that the punch and die are carefully centered and all pieces produced by the set up should be checked until the inspector is assured of the proper functioning, after which a percentage inspection should be sufficient.

(2) After the cupping and each drawing operation, the cups are annealed before the succeeding draw. It is desirable to hold the grain size within certain limits after each anneal. From the standpoint of economy as well as physical properties, cups should not be left to soak in the furnace for a longer period than is necessary to acquire the desired grain size. Undue soaking over a prolonged period may cause volatilization of the zinc, also create undue heavy oxide which would cause trouble at the pickling operation. Recommended grain sizes and the method used to obtain same is further discussed in the sheets containing the sketch of each operation.

(3) In order to eliminate expansion of the primer seat in service, it is necessary to cold work the metal surrounding it either by drilling the hole smaller than is necessary and forcing a mandrel through as stated on the drawing or, using the method or one similar to that described in this description.

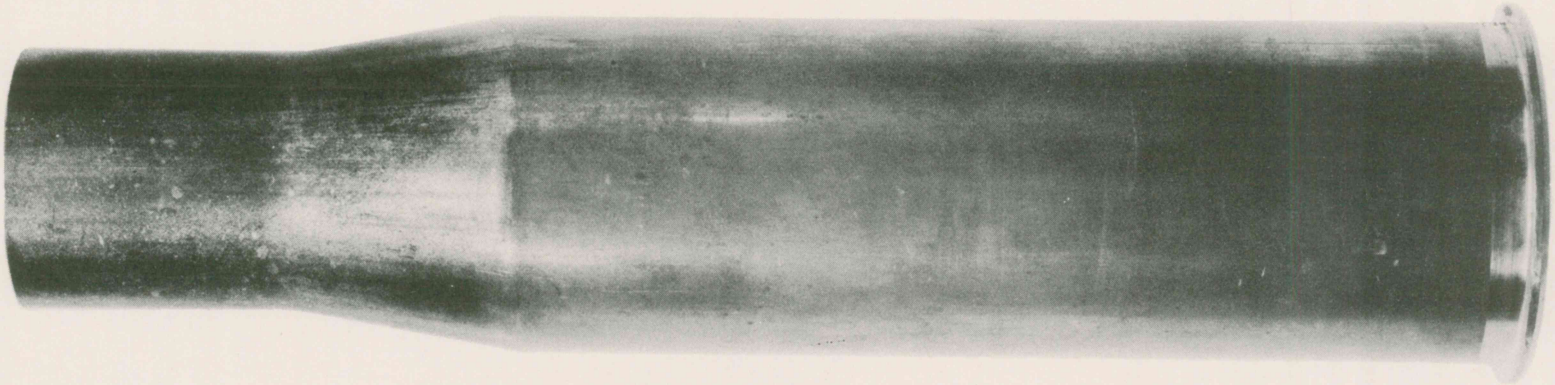

CASE, CARTRIDGE, 37 MM. M16

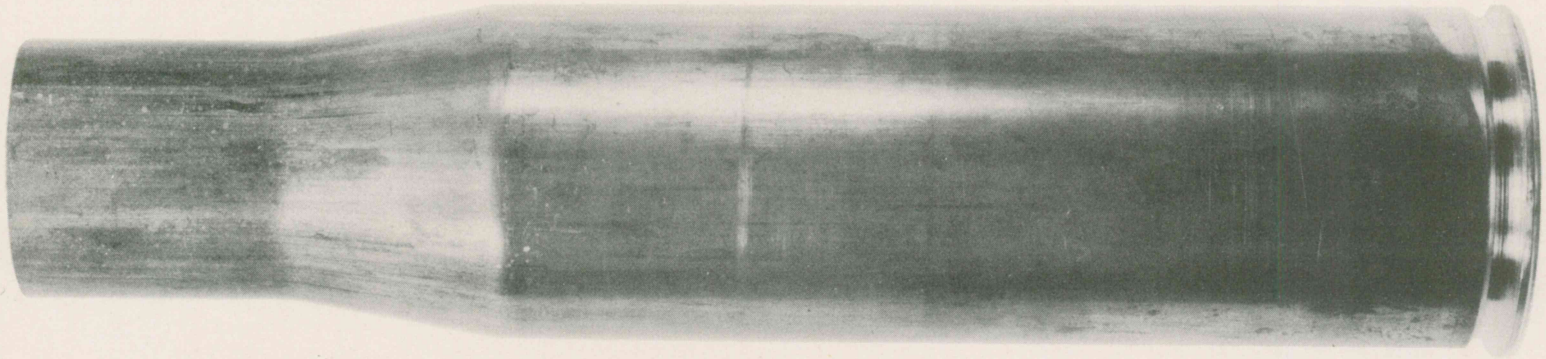

CASE, CARTRIDGE, 37 MM. M17

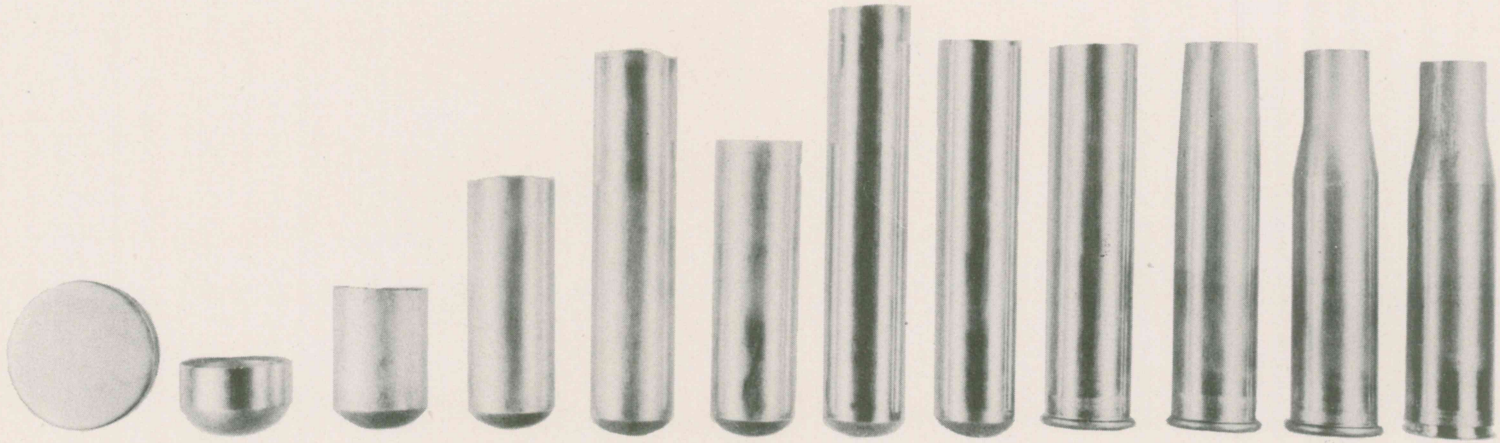

OPERATIONS:- 37MM CARTRIDGE CASE M17

TABLE OF CONTENTS

MANUFACTURE OF CASE, CARTRIDGE, 37 MM., M16 & M17

ORDNANCE DEPARTMENT DRAWINGS 71-2-96
71-2-100

LIST OF OPERATIONS . . . . . Pages 1 to 7 incl.

BILL OF MATERIAL . . . . . Page 8

CONTRACTOR'S INSPECTION . . . . . Pages 9 to 12 incl.

GOVERNMENT INSPECTION . . . . . Page 13

SHOP LAYOUT . . . . . Page 14

LIST OF MACHINES . . . . . Page 15

DRAWINGS OF FIXTURES, TOOLS, GAGES, ETC. . . . . FB 11175
FB 17187 to
FB 17285 incl.

ORDNANCE DEPARTMENT INSPECTION GAGE DRAWINGS . . . . . A 52351 to
A 52353 incl.
A 52355 to
A 52359 incl.
A 52361 to
A 52363 incl.
B 21725 to
B 21727 incl.
B 111721
B 112908
C 10785
C 10786
D 10112-1
D 10112-2
D 10118-1
D 10118-2

HEAT TREATMENT & FINAL FINISH

LINE NO.	LIST OF SPECIFICATIONS	SPEC. NUMBER	REQUIRED BY
1	AMMUNITION, EXCEPT SMALL ARMS AMM, GENERAL SPEC. FOR	50-0-1	DRG. 71-2-96
2			
3	CARTRIDGE BRASS DISKS FOR ARTILLERY AMMUNITION	57-173	DRG. 71-2-96
4	CARTRIDGE CASES, BRASS, FOR ARTILLERY AMMUNITION	50-66-1	DRG. 71-2-96
5	COPPER, INGOTS	QQ-C-521	57-173
6			
7			
8	METALS; GENERAL SPECIFICATION FOR THE INSPECTION OF	QQ-M-151	57-173
9			
10	ZINC; SLAB (SPELTER)	QQ-Z-351	57-173

* SPECIFICATION NUMBERS SHOWN ARE BASIC NUMBERS ONLY. WHEN A SPECIFICATION IS REVISED A LETTER IS AFFIXED TO ITS BASIC NUMBER. SPECIFICATIONS REFERRED TO IN THESE SPECIFICATIONS AND NOT LISTED HEREON, SHALL NOT APPLY.

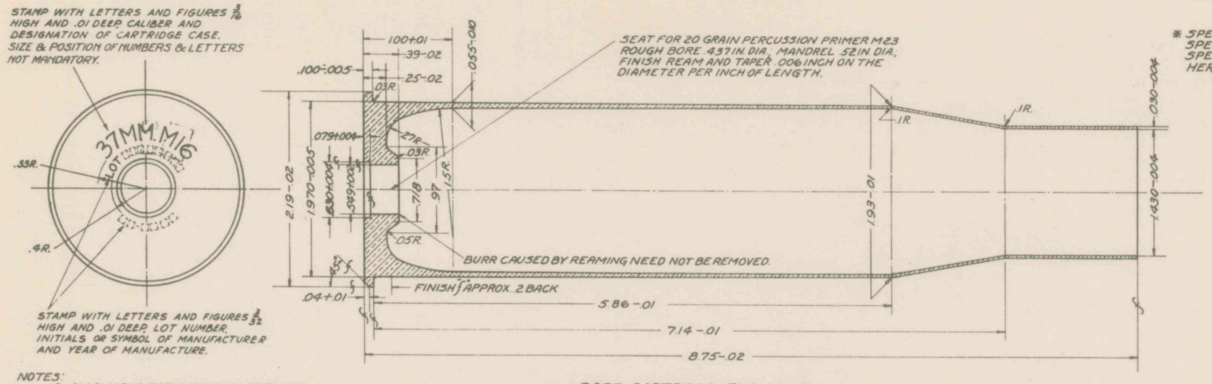

NOTES:
A-ALLOWABLE ECCENTRICITY BETWEEN THE PRIMER HOLE AND OUTSIDE CYLINDRICAL SURFACE OF CASE ON THE 1.970 DIAMETER .01 (i.e. A TOTAL DIFFERENCE OF INDICATOR READING OF .02 INCH)
B-COMPUTED CAPACITY OF CASE TO OVERFLOWING WITH PRIMER IN PLACE 20.9 CU. IN. APPROX.
C-WEIGHT OF CASE, .93 LB. APPROX.

CASE, CARTRIDGE 71-2-96 A B
CARTRIDGE BRASS
TO BE ACCEPTABLE THE CARTRIDGE CASE MUST FREELY ENTER THE CHAMBER GAGE

THIS CASE USED IN GUNS M3, M5, T7 & T8.

NOTICE: [illegible]

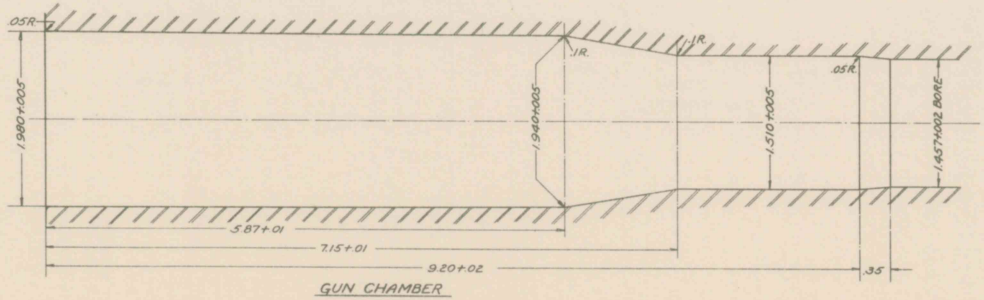

GUN CHAMBER

SCALE = 2:1

SUPERSEDES OLD TRACING 71E-2-96 UNDER REVISION DATE OF NOV. 30 1938.

CASE, CARTRIDGE, 37 M.M M16

DECEMBER 8, 1924	CLASS	DIVISION	DRAWING	FILE
REVISIONS	71	2	96	
1 7/2/26 6 8-3-39	SYMBOL			
2 7/10/31 7 3-6-40				
3 11/8/37 8 4-18-40				
4 11/30/38				
5 12/30/38				

DRG. PERTAINS TO

D

DFTSMAN E.J. MAC — TRACER E.J. MAC — L'DR. D'FTSMAN — CHIEF D'FTSMAN H.G.T.

SUBMITTED: Milton Cragg MAJOR ORD. DEPT. U.S.A.

EXAMINED: [signature] COL. ORD. DEPT. U.S.A.

APPROVED BY ORDER OF THE CHIEF OF ORDNANCE: John T. Boston LT. COL. ORD. DEPT. U.S.A.

ORDNANCE DEPT. U.S.A.

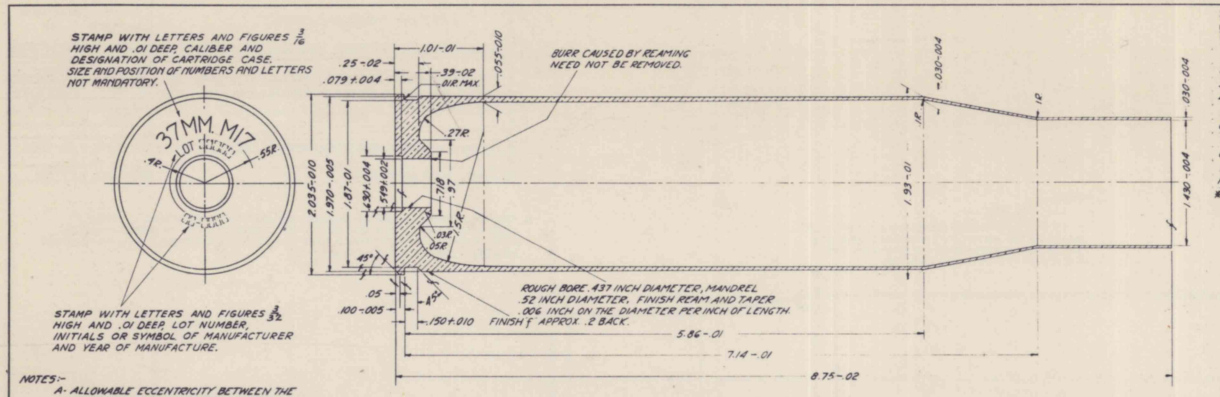

NOTES:-

A- ALLOWABLE ECCENTRICITY BETWEEN THE PRIMER HOLE AND OUTSIDE CYLINDRICAL SURFACE OF CASE ON THE 1.970 DIAMETER, .01 (I.E. A TOTAL DIFFERENCE OF INDICATOR READING OF .02 INCH).

B- COMPUTED CAPACITY OF CASE TO OVERFLOWING WITH PRIMER IN PLACE 80.2 CU. IN. APPROX.

C- WEIGHT OF CASE .85 LB. APPROX.

D- REMOVE ALL BURRS.

CASE, CARTRIDGE 71-2-100A B
CARTRIDGE BRASS
TO BE ACCEPTABLE, THE CARTRIDGE CASE MUST FREELY ENTER THE CHAMBER GAGE.

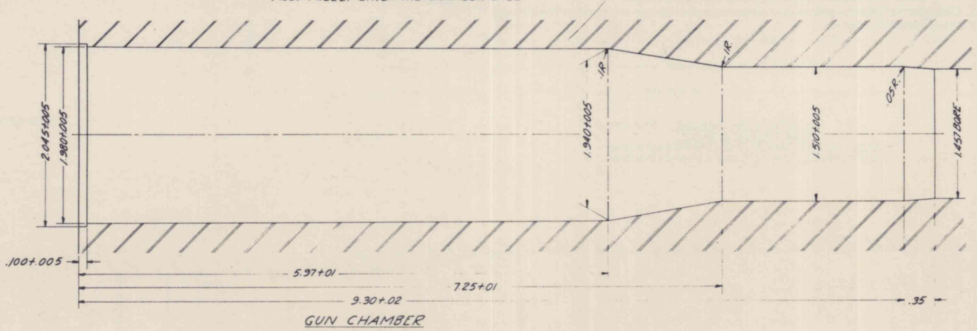

GUN CHAMBER

LINE NO	LIST OF SPECIFICATIONS	SPEC. NUMBER *	REQUIRED BY
1	AMMUNITION, EXCEPT SMALL ARMS AMM., GEN SPEC FOR	50-0-1	DRG 71-2-100
2			
3	CARTRIDGE BRASS DISKS FOR ARTILLERY AMMUNITION	57-173	DRG 71-2-100
4	CARTRIDGE CASES, BRASS, FOR ARTILLERY AMMUNITION	50-46-1	DRG 71-2-100
5	COPPER, INGOTS	00-C-521	57-173
6			
7	METALS, GENERAL SPECIFICATION FOR INSPECTION OF	00-M-151	57-173
8			
9			
10	ZINC, SLAB (SPELTER)	00-Z-351	57-173

* THE SPECIFICATION NUMBERS SHOWN ARE BASIC NUMBERS ONLY. WHEN A SPECIFICATION IS REVISED, A LETTER IS AFFIXED TO ITS BASIC NUMBER. SPECIFICATIONS REFERRED TO IN THESE SPECIFICATIONS AND NOT LISTED HEREON, SHALL NOT APPLY.

THIS CASE USED IN M1A2 GUN.

SUPERSEDES OLD TRACING 71E-2-100 UNDER REVISION DATE OF JUNE 16, 1939.

NOTICE [illegible]

SCALE, INCHES, 3/8

CASE, CARTRIDGE, 37 MM., M17

MARCH 26, 1926				CLASS	DIVISION	DRAWING	FILE
REVISIONS				71	2	100	
4	12-30-38	8	4-18-40				
5	6-18-39			SYMBOL			
6	9-11-39						
7	3-6-40						

DRAFTSMAN	TRACER	ENGINEER
A.E.R.	V.J.M.	M.T.
CHECKED	CHECKED	CHIEF DRAFTSMAN
[illegible]	[illegible]	M.T.

DRG. PERTAINS TO

SUBMITTED: [illegible] LT. COL., ORD. DEPT., U. S. A.

EXAMINED: [illegible] COL., ORD. DEPT., U. S. A.

APPROVED BY ORDER OF THE CHIEF OF ORDNANCE: [illegible] LT. COL., ORD. DEPT., U. S. A.

D

ORDNANCE DEPT. U. S. A.

LIST OF OPERATIONS

MANUFACTURE OF CASE, CARTRIDGE, 37 MM., M16 & M17

1 F.A. 5-1-40

Drg. Nos. 71-2-96 & 71-2-100

OPER. NO.	OPERATION	MACHINE	APPROX. H. P.	NUMBER OF OPERATORS PER MACH.	ESTIMATED PROD. PER MACHINE PER 10 HRS.	FIXTURES, JIGS, TOOLS & GAGES	
						NAME	F. A. DRG. NO.
1	Cup	Straight Sided Press, Single Action, Single Crank, Single Geared, Tie Rod Frame, equipped with Dial Feed. 60 Ton Mid-Stroke Capacity. 10" Min. stroke	20	1 operator 1 helper	13,750	Operation Sketch Setup Sketch Punch Die Stripper Assembly Stripper Details Pin Gage	FB 17187 FB 17188 FB 17189 FB 17190 FB 17191 FB 17192 FB 17193 FB 17194
2	Anneal & Pickle	Batch Annealing Furnace with capacity for Basket 30" x 52" x 30" high. Washing & pickling Tanks.		2 men operate 4 furnaces 2 men do pickling & washing from 4 furnaces	16,000		
3	1st Draw	Straight Sided Press, Single Action, Single Crank, Single Geared, Tie Rod Frame, equipped with dial feed. 60 Ton Mid-Stroke Capacity. 12" Min. stroke.	20	1 operator 1 helper	12,500	Operation Sketch Setup Sketch Punch Die Stripper Assembly Stripper Details Pin Gage	FB 17195 FB 17196 FB 17197 FB 17198 FB 17191 FB 17192 FB 17193 FB 17199
4	Anneal & Pickle	Batch Annealing Furnace with Capacity for Basket 30" x 52" x 30" high. Washing & Pickling Tanks.		Same as Operation No. 2	16,000		

LIST OF OPERATIONS

MANUFACTURE OF CASE, CARTRIDGE, 37 MM., M16 & M17

2 F.A. 5-1-40

Drg. Nos. 71-2-96 & 71-2-100

OPER. NO.	OPERATION	MACHINE	APPROX. H. P.	NUMBER OF OPERATORS PER MACH.	ESTIMATED PROD. PER MACHINE PER 10 HRS.	FIXTURES, JIGS, TOOLS & GAGES	
						NAME	F. A. DRG. NO.
5	2nd Draw	Straight Sided Press, Single Action, Single Crank, Single Geared Tie Rod Frame, equipped with dial feed. 50 Ton Mid-Stroke Capacity. 14" Min. stroke.	20	1 operator 1 helper	8,875	Operation Sketch Setup Sketch Punch Die Stripper Assembly Stripper Details Pin Gage	FB 17200 FB 17201 FB 17202 FB 17203 FB 17191 FB 17192 FB 17193 FB 17204
6	Anneal & Pickle	Batch Annealing Furnace with Capacity for Basket 30" x 52" x 30" high. Washing & Pickling Tanks.		Same as Operation No. 2	16,000		
7	3rd Draw & Wash	Straight Sided Press, Single Action, Single Crank, Single Geared, Tie Rod Frame, equipped with dial feed, 20 Ton Mid-Stroke Capacity. (Ferracute #DG55 or Equal)	20	1 operator 1 helper	10,000	Operation Sketch Setup Sketch Punch Die Stripper Assembly Stripper Details Pin Gage	FB 17205 FB 17206 FB 17207 FB 17208 FB 17191 FB 17193 FB 17209 FB 17210
8	1st Trim	Special Automatic Cartridge Case Trimming Machine. (V & O or Equal)	1.5	1 operator 1 helper	16,750	Operation Sketch Setup Sketch Cutter Length Gage	FB 17211 FB 17212 FB 17213 FB 17214 FB 17215

LIST OF OPERATIONS

MANUFACTURE OF CASE, CARTRIDGE, 37 MM., M16 & M17

3 F.A. 5-1-40

Drg. Nos. 71-2-96 & 71-2-100

OPER. NO.	OPERATION	MACHINE	APPROX. H. P.	NUMBER OF OPERATORS PER MACH.	ESTIMATED PROD. PER MACHINE PER 10 HRS.	FIXTURES, JIGS, TOOLS & GAGES	
						NAME	F. A. DRG. NO.
9	Anneal & Pickle	Batch Annealing Furnace with Capacity for Basket 30" x 52" x 30" high. Washing & Pickling Tanks		Same as Operation No. 2	16,000		
10	4th Draw & Wash	Straight Sided Press, Single Action, Single Crank, Single Geared, Tie Rod Frame, equipped with Dial Feed, 12.5 Ton Mid-Stroke Capacity. (Ferracute #DG56 or Equal)	15	1 operator 1 helper	8,500	Operation Sketch Setup Sketch Punch Die Stripper Assembly Stripper Details Pin Gage	FB 17216 FB 17217 FB 17218 FB 17219 FB 17191 FB 17220 FB 17221 FB 17222
11	2nd Trim	Special Automatic Cartridge Case Trimming Machine. (V & O or Equal)	1.5	1 operator 1 helper	16,750	Operation Sketch Setup Sketch Cutter Length Gage	FB 17223 FB 17211 FB 17212 FB 17213 FB 17224
12	Head & Indent	Knuckle Joint Heading Press, 400 Ton Capacity with Dial Feed. (Ferracute E401 or Equal)	20	1 operator 1 helper	8,500	Operation Sketch Setup Sketch Heading Die Heading Post Heading Post Nose & Bolt Bumpers Rough Dia. Flange Gage Rough Thickness Head Gage Assembly Rough Thickness Head Gage Details	FB 17225 FB 17226 FB 17227 FB 17228 FB 17229 FB 17230 FB 17231 FB 17232 FB 17233 FB 17234

LIST OF OPERATIONS

4 F.A. 5-1-40

MANUFACTURE OF CASE, CARTRIDGE, 37 MM., M16 & M17

Drg. Nos. 71-2-96 & 71-2-100

OPER. NO.	OPERATION	MACHINE	APPROX. H. P.	NUMBER OF OPERATORS PER MACH.	ESTIMATED PROD. PER MACHINE PER 10 HRS.	FIXTURES, JIGS, TOOLS & GAGES	
						NAME	F. A. DRG. NO.
13	Pierce Primer Hole	Special Punch Press Single Action, Dial Feed (Zeh & Hahneman or Equal)	3	1	10,000	Operation Sketch Setup Sketch Punch Die & Holder Details	FB 17235 FB 17236 FB 17237 FB 17238 FB 17239
13A	(Alternate Method) Drill Primer Hole	Single Spindle Drill Press, Box Column, #2 Morse Taper, Max. Distance Spindle to Table 18" (Allen or Equal), equipped with Double Spindle Drill Head, made by U. S. Drill Head Co. Cincinnati Serial #11171. Cleveland Universal Jig Company.	2	1	6,250		
14	Anneal for Taper and Wash	Liquid Annealing Furnace, equipped with Pyrometers FB 17240. Washing Tanks		1 operator 5 helpers	10,000	Sketch of Annealing Furnace Rack	FB 17240 FB 17241 to FB 17243 incl.
15	1st Taper	Inclinable Press, Single Action, Single Geared, equipped with Dial Feed. (Ferracute #CG24 or Equal)	5	1 operator 1 helper	10,000	Operation Sketch Setup Sketch Die Knockout Rod	FB 17244 FB 17245 FB 17246 FB 17247 FB 17248

LIST OF OPERATIONS

MANUFACTURE OF CASE, CARTRIDGE, 37 MM., M16 & M17

5 F.A. 5-1-40

Drg. Nos. 71-2-96 & 71-2-100

OPER. NO.	OPERATION	MACHINE	APPROX. H. P.	NUMBER OF OPERATORS PER MACH.	ESTIMATED PROD. PER MACHINE PER 10 HRS.	FIXTURES, JIGS, TOOLS & GAGES	
						NAME	F. A. DRG. NO.
16	2nd Taper	Inclinable Press, Single Action, Single Geared, Equipped with Dial Feed (Ferracute #CG24 or Equal)	5	1 operator 1 helper	13,750	Operation Sketch Setup Sketch Die Knockout Rod Inside Dia. Mouth Gage	FB 17249 FB 17245 FB 17246 FB 17250 FB 17251 FB 17252
17	Finish Head, primer hole & final trim (M16)	Special Automatic Cartridge lathe 1.970" dia. chuck capacity. (Coulter or equal)	12.5	1	2,750	Operation Sketch Setup Sketch Form Tool Step Reamer Trimming Tool Facing Tool Collet Stop GAGES Inside Dia. at Mouth Dia. under Flange Dia. of Flange Thickness of Flange Thickness of Head (Assembly) Thickness of Head (Details) Dia. of Primer Hole Dia. of Primer Hole C'Bore. Length of Primer Hole Boss Depth of Primer Hole C'Bore. Concentricity of Primer Hole and 1.97" dia. (Assembly) Concentricity of Primer Hole and 1.97" dia. (Details) Total length	FB 17253 FB 17254 FB 17255 FB 17256 FB 17257 FB 17258 FB 17259 FB 17260 FB 17252 FB 17261 FB 17262 FB 17263 FB 17264 FB 17265 FB 17266 FB 17267 FB 17268 FB 17269 FB 17270 FB 17271 FB 17272 FB 17273 FB 17274

LIST OF OPERATIONS

MANUFACTURE OF CASE, CARTRIDGE, 37 MM., M16 & M17

6 F.A. 5-1-40

Drg. Nos. 71-2-96 & 71-2-100

OPER. NO.	OPERATION	MACHINE	APPROX. H. P.	NUMBER OF OPERATORS PER MACH.	ESTIMATED PROD. PER MACHINE PER 10 HRS.	FIXTURES, JIGS, TOOLS & GAGES	
						NAME	F. A. DRG. NO.
17A	Finish Head, Primer Hole & Final Trim (M17)	Special Automatic Cartridge Lathe (Coulter or Equal)	12.5	1	2,750	Operation Sketch	FB 17275
						Setup Sketch	FB 17254
						Form Tool	FB 17276
						Step Reamer	FB 17256
						Trimming Tool	FB 17257
						Facing Tool	FB 17258
						Collet	FB 17259
						Stop	FB 17260
						GAGES	
						Inside Dia. at Mouth	FB 17252
						Dia. Under Flange	FB 17261
						Dia. Flange	FB 17277
						Thickness Flange	FB 17263
						Dia. Extractor Groove	FB 17278
						Width Extractor Groove	FB 17279
						Thickness Head Gage (Assembly)	FB 17264
						Thickness Head Gage (Details)	FB 17265
							FB 17266
						Dia. Primer Hole	FB 17267
						Dia. Primer Hole C'Bore.	FB 17268
						Length Primer Hole Boss	FB 17269
						Depth Primer Hole C'Bore	FB 17270
						Concentricity Primer Hole & 1.97" Dia. Assembly	FB 17271
						Concentricity Primer Hole & 1.97" Dia. Details	FB 17272
							FB 17273
						Total Length	FB 17274
18	Final Mouth Anneal and Wash	Liquid Annealing Furnace equipped with Pyrometers FB 17240. Washing Tanks.		1 operator 5 helpers	10,000	Sketch of Annealing Furnace	FB 17240
						Rack	FB 17241 to FB 17243 incl.

LIST OF OPERATIONS

MANUFACTURE OF CASE, CARTRIDGE, 37 MM., M16 & M17

7 F.A. 5-1-40

Drg. Nos. 71-2-96 & 71-2-100

OPER. NO.	OPERATION	MACHINE	APPROX. H. P.	NUMBER OF OPERATORS PER MACH.	ESTIMATED PROD. PER MACHINE PER 10 HRS.	FIXTURES, JIGS, TOOLS & GAGES	
						NAME	F. A. DRG. NO.
19	Low Temperature Stress Relief Treatment	Continuous Air heated drawing furnace, one hour cycle (Surface Combustion Corp. or Equal).		1	To suit production		
20	Inspection	Bench			To suit production		
21	Stamp & Pack	Stamping Machine Dial Feed. (Noble & Westbrook or Equal)	.75	2	8,500	Operation Sketch Setup Sketch Post, Stamping Die, Stamping Holder Shank	FB 17280 FB 17281 FB 17282 FB 17283 FB 17284 FB 17285

BILL OF MATERIAL

MANUFACTURE OF CASE, CARTRIDGE, 37 MM., M16 & M17 — 8 F.A. 5-1-40

1	2	3	4	5	6	7	8	9
NAME OF PART	DRAWING NUMBER	PIECE MARK NUMBER	NO. PER CASE	MATERIAL	SPEC.	COMMERCIAL FORM OF MATERIAL AND APPROXIMATE SIZE IN THE ROUGH	AVERAGE AMOUNT OF MATERIAL PER CASE IN THE ROUGH	AMOUNT OF MATERIAL PER 100,000 CASES INCLUDING 3% SPOILAGE
Case, Cartridge	71-2-96 71-2-100	71-2-96A 71-2-100A	1 1	Disc, Cartridge Brass	57-173	Disc 3.380"+.008 Dia. .410+.008 Thick	1.225 lbs.	126,175 lbs.

MANUFACTURE OF CASE, CARTRIDGE, 37 MM., M16 & M17

DISCS:- It is assumed that the discs have been inspected and tested at the plant of the cartridge brass manufacturer, or if the case manufacturer also manufactures the brass, it is assumed that the discs have been inspected and tested in his brass factory. As a check against this, however, the contractor's inspector verifies 10% of every new shipment of discs received in the shop by actual measurement of dimensions. Special attention is paid to the thickness of the disc and the variation in the thickness. Discs which run thin are apt to not provide sufficient metal for the head, while those in which the thickness varies will cause eccentric cups.

All discs are inspected visually for cracks, seams, dirt and foreign matter, or any other defects in the metal.

It is important that the discs have been properly annealed after rolling, otherwise cracks or seams are likely to develop in the drawing operation. Notwithstanding the Brinell test carried out at the brass manufacturer's plant, the contractor's inspector should check at least one disc out of every lot of brass by the Brinell Test. For this test the disc should be cut in two parts and the test taken upon the cross section. From time to time microscopic examination should be made of the discs selected for this test.

OPERATIONS:- (a) Cupping and Drawing

After the cupping and each drawing operation, the case is washed in order to eliminate as much scale after annealing as possible, also to permit a quick visual examination for cracks, seams, scratches or any other defects in the metal. Cases in which

MANUFACTURE OF CASE, CARTRIDGE, 37 MM., M16 & M17

OPERATIONS:- Continued

defects appear are at once scrapped unless the defect can be readily removed or corrected in subsequent operations. When scratches are observed, the punch or die is at once checked and the scratches removed by polishing and replating.

From time to time the dies are checked with the pin gage to assure they have not worn beyond the specified limits. The cups are gaged for variation of wall thickness.

In the cupping, drawing, heading and tapering operations where the metal has been constrained in the die, a certain amount of spring takes place after the piece leaves the die. The spring for each operation is variable within certain small limits and must be considered in placing dimensions upon the gages used for checking the wear of the dies. The wear on the punches is slower than on the dies. Templates should be made for use in checking the noses of all punches when they are ground, and similar templates should be used by the inspector when checking the punches from time to time.

Whenever a new punch or die is used, the variation in wall thickness of every case coming from the press should be gaged until the inspector is assured of the correct working of the new setup.

(b) Heading

At the beginning of the contract and from time to time during production, cases are sectionalized after being headed in order to verify correctness of the cavity of the case.

MANUFACTURE OF CASE, CARTRIDGE, 37 MM., M16 & M17

OPERATIONS:- Continued

(c) Taper Draw

After the taper draw, all cases are visually examined for scratches, seams and folds, and gaged for the inside diameter at mouth.

(d) Finish Machine Head and Trim

One inspector checks the work from four machines immediately after it is machined so as to keep the percentage of rejects to a minimum. If the inspector finds any cases with the tolerances beyond the gage limits the machine which produced them is immediately stopped and adjustments are made or dull tools are replaced with newly ground ones whichever the case may be.

(e) Annealing

A periodic check is made of the furnace controls in order to assure that all annealing temperatures are correct and that the cases are being annealed for the proper length of time. After each annealing operation at least one cup out of every 25,000 should be checked for grain size.

(f) Stamping

The contractor's inspector verifies the stamping of each case with particular reference to the lot number. The size of lots and the assignment of lot numbers are covered by instructions which he should be furnished by the Government Inspector.

GENERAL INSPECTION:

After the final washing, all cases pass before the contractor's inspector. They are carefully examined visually, both inside and out, for dents, cracks, scratches, dirt or other defects in the metal. The sharp corners and burrs must be removed.

MANUFACTURE OF CASE, CARTRIDGE, 37 MM., M16 & M17

GENERAL INSPECTION:- Continued

At the beginning of the contract the contractor's inspector selects, from the first fifty cases completed, twenty seven cases for test. Pending the results of the test, production is suspended.

Five of the cases are completely immersed for a period of thirty minutes in a 1% solution of mercurous nitrate. Upon examination after this test, no cracks must appear in the case.

Two of the cases are used for microscopic and tensile test. Five samples are cut from each case, as shown in Specifications 50-46-1. Each sample is placed in a tensile pulling machine and tested for tensile strength (See Specifications 50-46-1).Micrographs are made from the samples. These, together with the results of the tensile test, and the mercurous immersion test, are submitted to the Government Inspector. If satisfactory, twenty of the remaining cases are forwarded to the Government Proving Ground for firing test. If the results of this test are satisfactory, the Government inspector authorizes the contractor to proceed with production.

If the discs are furnished by the contractor, a report of the chemical analysis thereof must be submitted to the Government Inspector. The contractor's inspector periodically checks the wear on gages by comparison with limit check gages (See Drawing FB 11175 for design of limit gages).

GOVERNMENT INSPECTION

MANUFACTURE OF CASE, CARTRIDGE, 37 MM., M16 & M17

The Government inspector must be thoroughly familiar with Specifications 57-173 and 50-46-1. He witnesses all tests carried out by the contractor's inspector.

He should pass through the shop periodically and check up on all operations, reporting any bad material or incorrect practices at once to the contractor. His representative should witness the stamping operation to see that the cases are being correctly stamped.

He determines the size of lots of finished cases and furnished the contractor with information relative to lot numbers. In determining the size of lots he must use judgment. From the point of view of the ammunition loading and assembling contractor, it is desired to have lots as large as possible. In general, the size of a lot of finished cases will be governed by the size of the lot of discs. Discs furnished by different contractors should compose different lots of finished cases. If any material change is made in the manufacturing process, a new lot should start with the change. The lot number of a lot of finished cases consists of the contract number followed by a dash and the serial number of the lot of particular cases manufactured.

After the finished cases have been inspected by the contractor's inspector they are submitted to the Government inspector. They are carefully examined visually both inside and out for defects and cleanliness and then gaged with all gages shown on the Government Inspection Gage List.

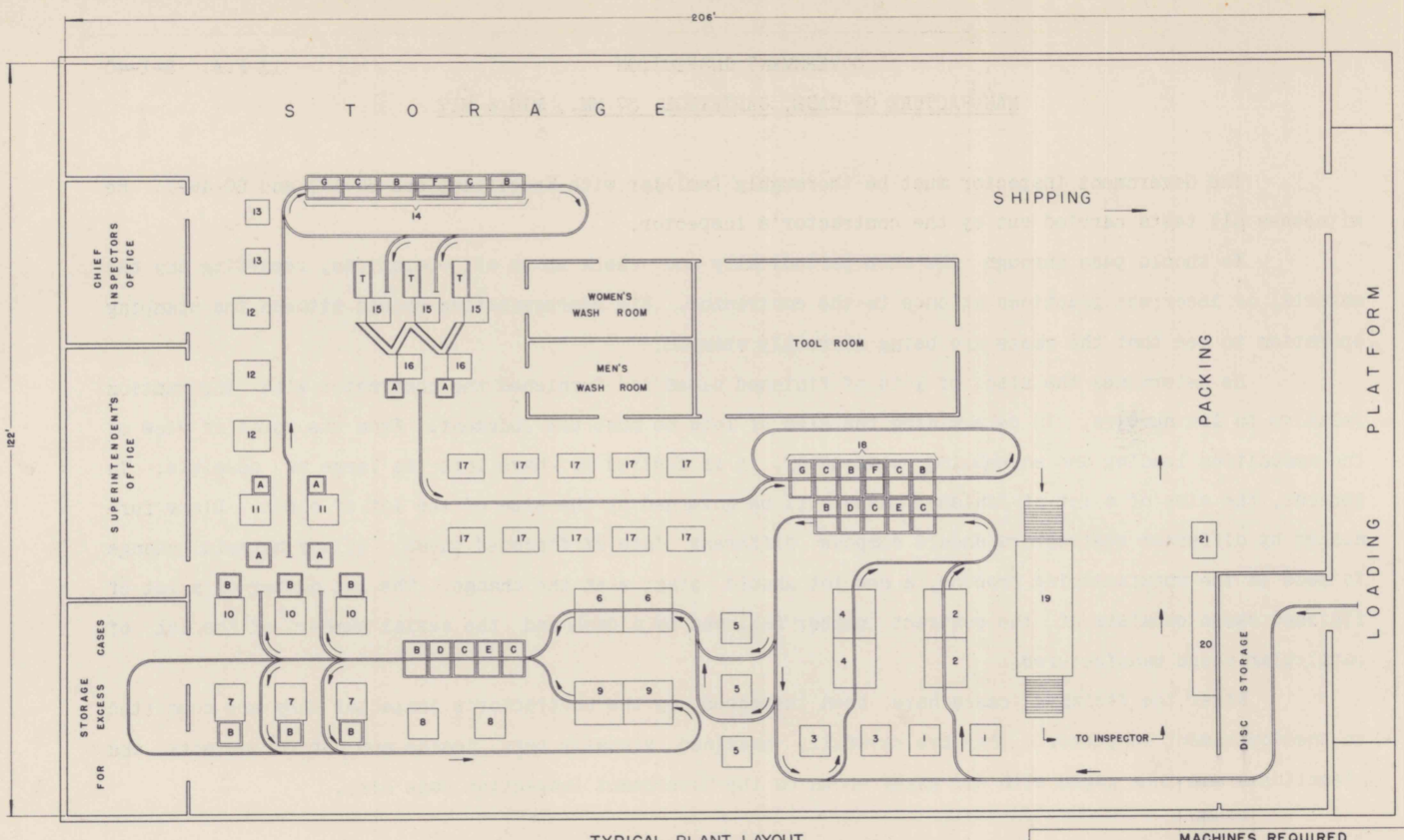

TYPICAL PLANT LAYOUT

BASED ON PRODUCTION OF 1,250,000 37MM. CARTRIDGE CASE, M16 & M17
PER MONTH OF 25DAYS, 2-10 HOUR SHIFTS

SHOP PERSONNEL REQUIRED 20 HOURS
1 - SHOP SUPERINTENDENT
1 - CHIEF INSPECTOR
2 - FOREMEN
4 - ASSISTANT FOREMEN
66 - GOVERNMENT INSPECTORS
14 - CONTRACTORS INSPECTORS

NOTES:-

FLOOR SPACE REQUIRED 25,132 SQ. FEET.
TOTAL MAN HOURS REQUIRED 1600 PER DAY, 40,000 PER MONTH
TOTAL MACHINISTS & TOOLMAKERS HOURS 100 PER DAY, 2500 PER MONTH

A - BINS
B - HOT WATER TANKS
C - COLD WATER TANKS
D - HOT SOAP SOLUTION TANKS
E - PICKLING TANKS
F - LIQUID ANNEALING FURNACES
G - SODA SOLUTION TANKS

T - TABLES
— MONORAIL CONVEYORS

MACHINES REQUIRED		FLOOR SPACE REQUIRED PER MACHINE
OPER.	CARTRIDGE CASE	
1	2 - 60 TON SINGLE ACTION PRESSES	5'X5'
3	2 - 60 TON SINGLE ACTION PRESSES	5'X5'
5	3 - 50 TON SINGLE ACTION PRESSES	5'X5'
7	3 - 20 TON SINGLE ACTION PRESSES	5'X6'
10	3 - 12 1/2 TON SINGLE ACTION PRESSES	5'X6'
12	3 - 400 TON KNUCKLE JOINT PRESSES	5'X6'
13	2 - SINGLE ACTION PUNCH PRESSES LEH & HAHNEMAN	4'X4'
15, 16	5 - INCLINABLE PRESSES SINGLE ACTION FERRACUTE "CG 24	4'X4'
8, 11	4 - CARTRIDGE CASE TRIMMING MACHINES	5'X5'
17	10 - AUTOMATIC CARTRIDGE LATHES	4'X6'
21	1 - STAMPING MACHINE	4'X4'
2,4,6,9	8 - ANNEALING FURNACES	7'X8'
14,18	2 - LIQUID ANNEALING FURNACES	4'X6'
19	1 - CONTINUOUS OIL OR GAS BURNING ANNEALING FURNACE	9'X35'
2,4,6,9	2 - PICKLING TANKS	4'X6'
2,4,6,9,14,18	18 - WASHING TANKS	4'X6'
7,10	6 - WASHING TANKS	4'X4'
10,11,16	BINS TO SUIT PRODUCTION	4'X4'

MACHINES REQUIRED		FLOOR SPACE REQUIRED PER MACHINE
OPER.	CARTRIDGE CASE	
1	2 - 60 Ton Single Action Presses	5' x 5'
3	2 - 60 " " " "	5' x 5'
5	3 - 50 " " " "	5' x 5'
7	3 - 20 " " " "	5' x 6'
10	3 - 12 1/2 Ton Single Action Presses	5' x 6'
12	3 - 400 Ton Knuckle Joint Presses	5' x 6'
13	2 - Single Action Punch Presses Leh & Hahneman	4' x 4'
15,16	5 - Inclinable Presses Single Action Ferracute #CG24	4' x 4'
8,11	4 - Cartridge Case Trimming Machines	5' x 5'
17	10 - Automatic Cartridge Lathes	4' x 6'
21	1 - Stamping Machine	4' x 4'
2,4,6,9	8 - Annealing Furnaces	7' x 8'
14,18	2 - Liquid Annealing Furnaces	4' x 6'
19	1 - Continuous Oil or Gas Burning Annealing Furnace	9' x 35'
2,4,6,9	2 - Pickling Tanks	4' x 6'
2,4,6,9,14,18	18 - Washing Tanks	4' x 6'
7,10	6 - Washing Tanks	4' x 4'
10,11,16	Bins to Suit Production	4' x 4'

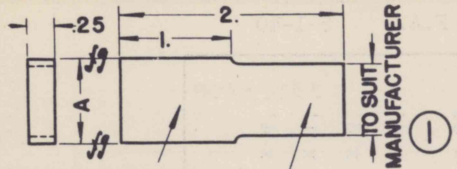

1

SINGLE END FLAT PLUG CHECK GAGE

MACH. STEEL
FINISH f PACK HARDEN

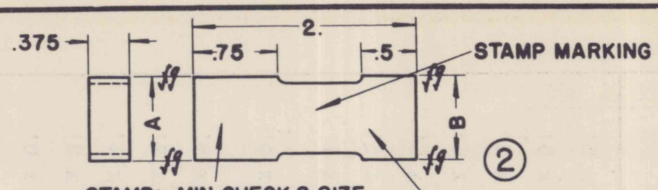

2

DOUBLE END FLAT PLUG CHECK GAGE

MACH. STEEL
FINISH f PACK HARDEN

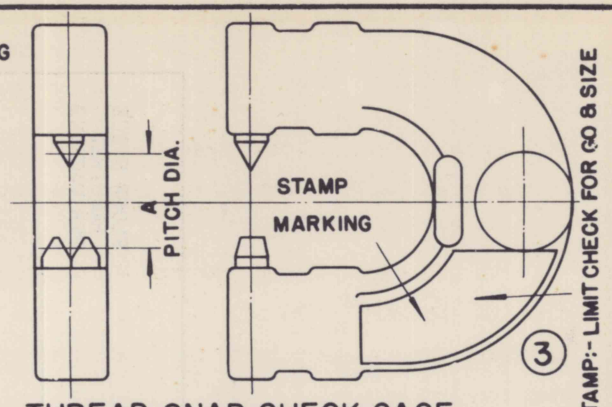

3

THREAD SNAP CHECK GAGE

GREENFIELD TAP & DIE CORP.
#1612 OR EQUAL

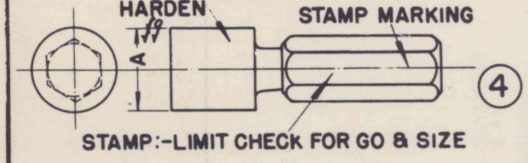

4

PLAIN PLUG CHECK GAGE

AMERICAN GAGE DESIGN STD.

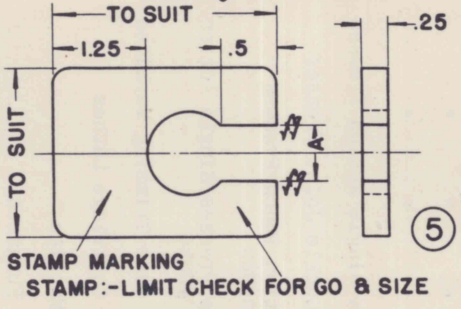

5

SNAP CHECK GAGE

MACH. STEEL
FINISH f PACK HARDEN

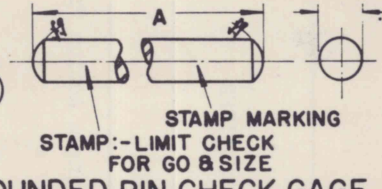

ROUNDED PIN CHECK GAGE

DRILL ROD
HARDEN ENDS

6

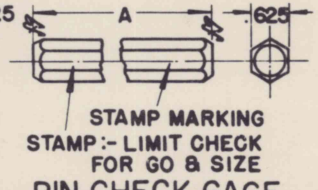

PIN CHECK GAGE

DRILL ROD
HARDEN ENDS

7

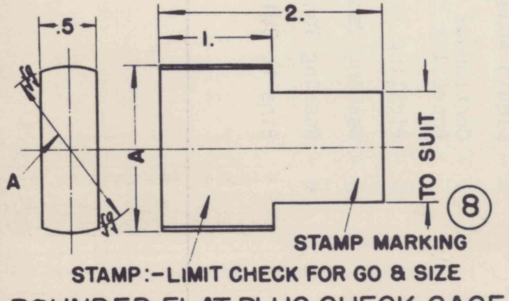

8

ROUNDED FLAT PLUG CHECK GAGE

MACH. STEEL
FINISH f PACK HARDEN

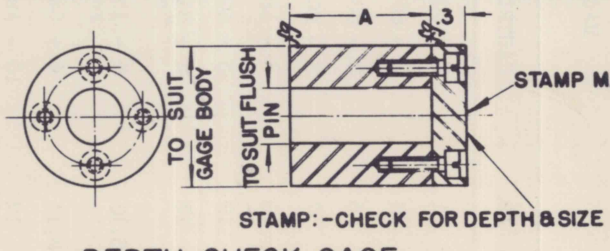

DEPTH CHECK GAGE

MACH. STEEL
FINISH f PACK HARDEN

LAP fg SURFACES
REMOVE ALL SHARP EDGES
SCALE:

9

PERTAINS TO		
DRAWING NO.	PIECE MARK	REV. DATE

REVISIONS
5-16-35

LIMIT CHECK GAGES

FRANKFORD ARSENAL — MARCH 15, 1930

SUBMITTED — IST. LT. ORD. DEPT., U. S. A.

APPROVED — ORD. DEPT., U. S. A.

DRAFTSMAN — CHECKED — CHIEF DRAFTSMAN

FB 11175

OPERATION NO. 1

In this operation and succeeding drawing operations, an inclined sheet steel slide is set in the recess at the base of the press beneath the die so as to catch the cups as they fall from the die and slide them clear of the press.

The discs are dipped into the lubricating solution and placed concave side up, in the dial. On the down stroke of the press the disc is forced through the die and stripper. On the upstroke, the stripper strips the cup from the punch. In falling from the punch, the cup slides down the inclined slide, clear of the press.

In this and the following straight drawing operations, the punch and die must be carefully centered with respect to one another.

OPERATION NO. 2

After the cupping and each drawing operation, the cups are annealed before passing to the succeeding drawing operations. At the present time, Frankford Arsenal uses steel trays which are loaded with cups and pushed through the furnaces with air pushers. The trays ride on angle irons set in the bottom of the heating chamber. The furnace is kept full of trays and at regular intervals of fifteen minutes each, a cool tray is pushed into the furnace. This forces a hot tray out of the other end onto the unloading platform. The furnace holds five trays when loaded to capacity.

Quenching by means of a spray of cold water immediately follows. Cups are then placed in a hexagonal monel metal basket equipped with trunnions and a removable crank for rotating and supported by a traveling air hoist. In the pickling and washing that follows it is necessary to rotate the baskets to insure good pickling, washing and draining. The pickling solution consists of a 3 to 5% solution of sulphuric acid and water maintained at approximately 170 F.

Continued on FB 17187A

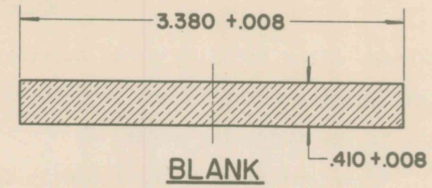

BLANK

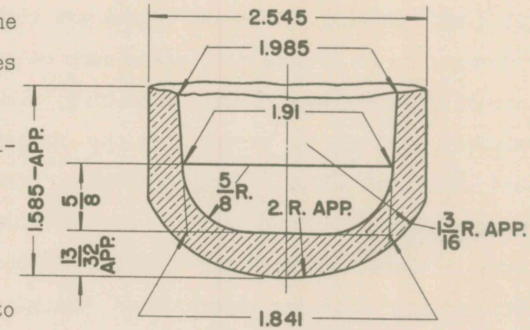

CUP

PERTAINS TO		
DRAWING NO.	PIECE MARK	REV. DATE
71-2-96	96 A	4-18-40
71-2-100	100 A	4-18-40

R-271-1B

REVISIONS

CASE, CARTRIDGE, 37 MM., M16 & M17

OPERATION: — CUP

FRANKFORD ARSENAL

SUBMITTED

CAPT. F. C. Ayers ORD. DEPT., U. S. A.

APPROVED

ORD. DEPT., U. S. A.

DRAFTSMAN	TRACER	L'D'G DR'SMAN
CHECKER	CHECKER	CH'F DR'SMAN
	RJ	

FB17187

OPERATION NO. 2 CONT'D

degrees. After pickling comes washing in cold water, washing in hot soapy water and rinsing in clean boiling water in the sequence listed. All these solutions are retained in vats accessible to the traveling hoist.

Frankford Arsenal has recently installed new batch type furnaces for annealing after cupping and drawing. Cups and cases are placed in baskets which are designed to fit one in a furnace. It is important to place each piece so it will drain properly in the succeeding operations of cold water spray quenching, pickling and washing since these operations are done without removing the pieces from the annealing basket. The basket material is a 35% chromium and 15% nickel alloy. Spray quenching, pickling and washing are done in the order as outlined above. However, since in this case a chrome-nickel alloy is used in the basket, it is necessary to change the pickling solution somewhat. At present Frankford Arsenal is using a solution of the following approximate analysis: sulphuric acid 10 to 15% or 64 gallons, copper sulphate 4.84% or 1100 pounds to 750 gallons of water and maintained at approximately 170 F. degrees.

Recommended grain sizes for annealed cups before redrawing are between 0.06 and 0.15 M/M at 75 magnifications. Heating time and temperatures necessary for obtaining these grain sizes necessary for good drawability depend largely upon the type of furnace and the quantity and distribution of the material in the basket.

Careful check-ups should be made to insure against unduly long soaking at temperatures above that for re-crystallization of brass in order to establish the correct heating times and temperatures that give the proper grain size after cupping and each successive drawing operation.

PERTAINS TO		
DRAWING NO.	PIECE MARK	REV. DATE
71-2-96	96A	4-18-40
71-2-100	100A	4-18-40

REVISIONS	CASE, CARTRIDGE, 37 MM., M16 & M17 OPERATION:- CUP FRANKFORD ARSENAL			
	SUBMITTED CAPT. ORD. DEPT., U. S. A.	DRAFTSMAN	TRACER RI	L'D'G DR'SMAN
		CHECKER	CHECKER	CH'F DR'SMAN
	APPROVED ORD. DEP., U. S. A.	FB17187A		

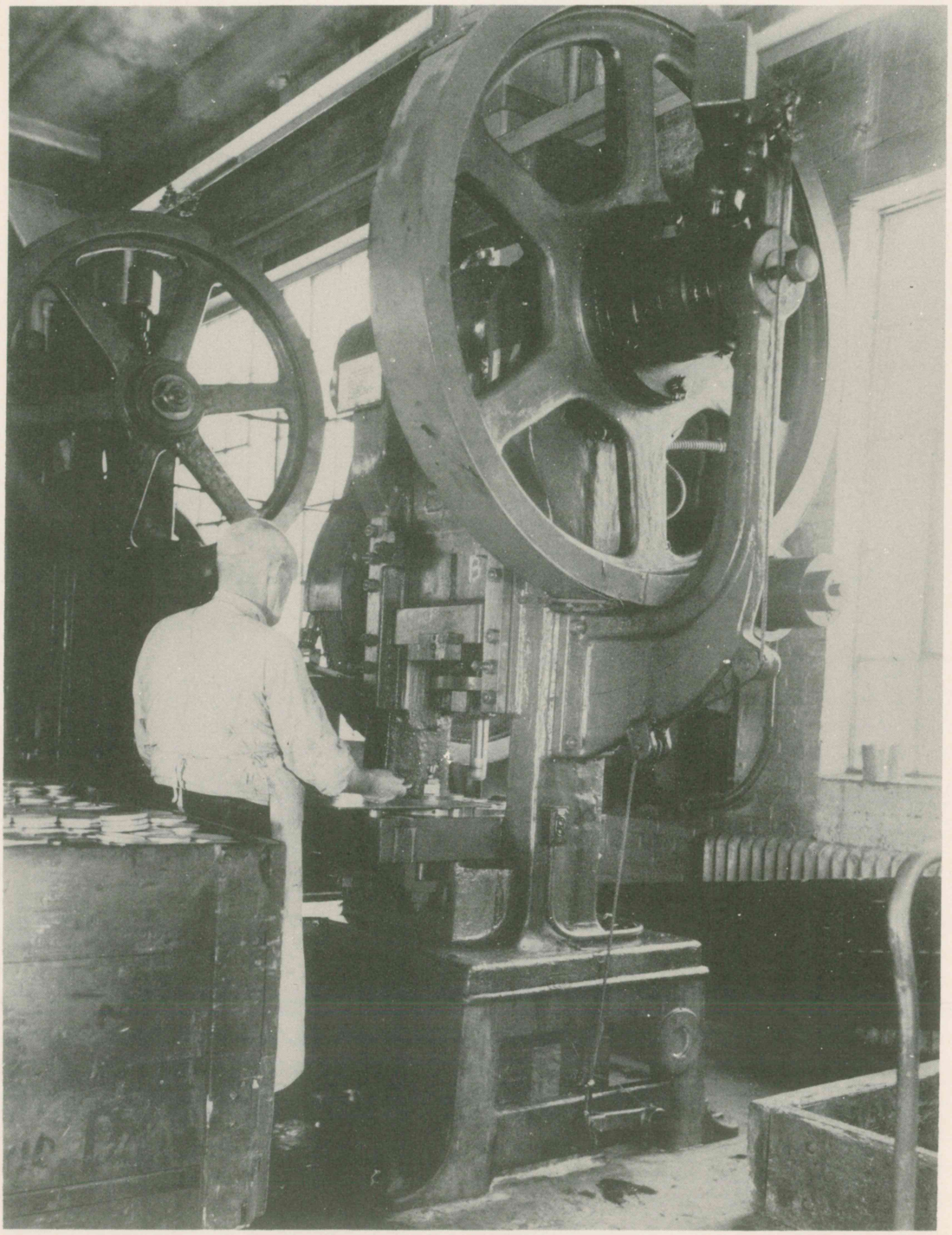

CUPPING OPERATION
37 M.M. CARTRIDGE CASE

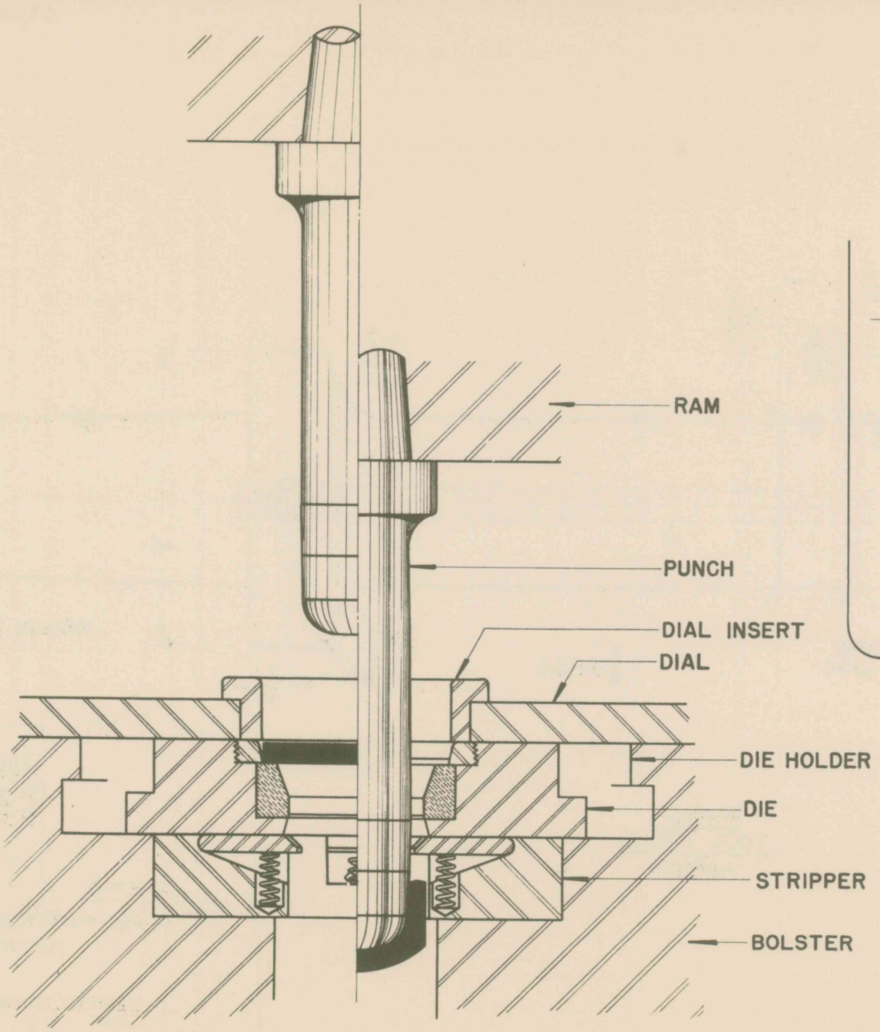

SETUP SKETCH
TAKEN THRU SECTION A-A

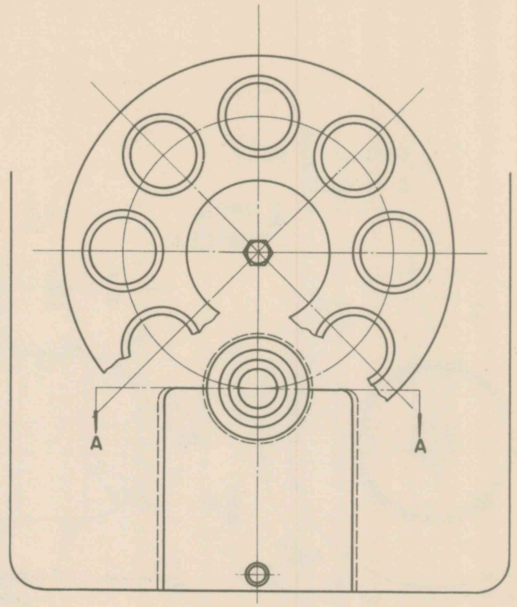

TOP VIEW

PERTAINS TO		
DRAWING NO.	PIECE MARK	REV. DATE
71-2-96	96A	4-18-40
71-2-100	100A	4-18-40

REVISIONS

CASE, CARTRIDGE, 37 MM., M16 & M17
OPERATION:-CUP

FRANKFORD ARSENAL MAY 1, 1940

SUBMITTED
CAPT. Foc aford ORD. DEPT., U. S. A.

DRAFTSMAN	TRACER	LEAD DR'MAN
R.H.G.	CKS	W.K.S.
CHECKER	CHECKER	CH'F DR'SMAN

APPROVED
ORD. DEPT., U. S. A.

FB17188

STAMP:-FB17189

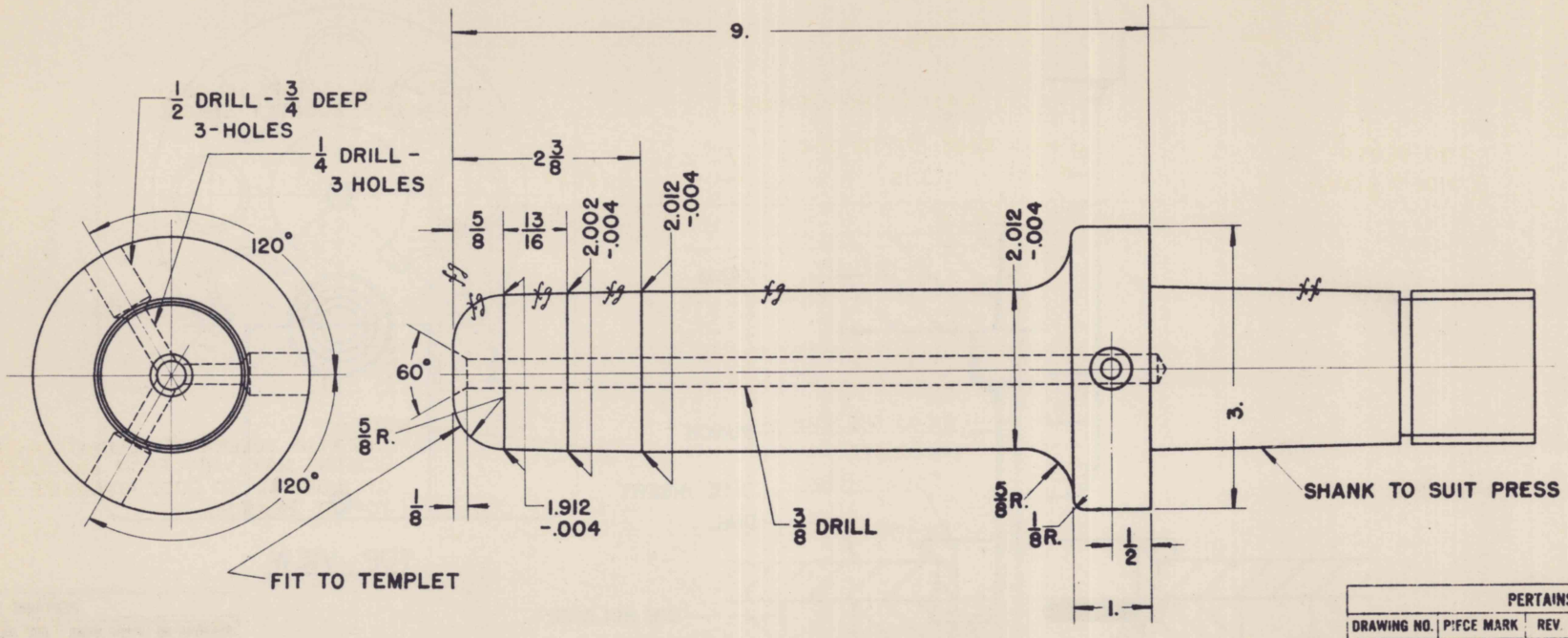

PUNCH
TOOL STEEL
HARDEN

PERTAINS TO		
DRAWING NO.	PIECE MARK	REV. DATE
71-2-96	96A	4-18-40
71-2-100	100A	4-18-40

R-271-2

REVISIONS

CASE, CARTRIDGE, 37 MM., M16 & M17
OPERATION:-CUP

FRANKFORD ARSENAL MAY 1, 1940

SUBMITTED
CAPT. F.O.C. Alford ORD. DEPT., U. S. A.

APPROVED
ORD. DEPT., U. S. A.

DRAFTSMAN	TRACER	DIV. CHAIRMAN
CHECKER	CHECKER	CH'T DR'SMAN

FB17189

STAMP:-FB 17190

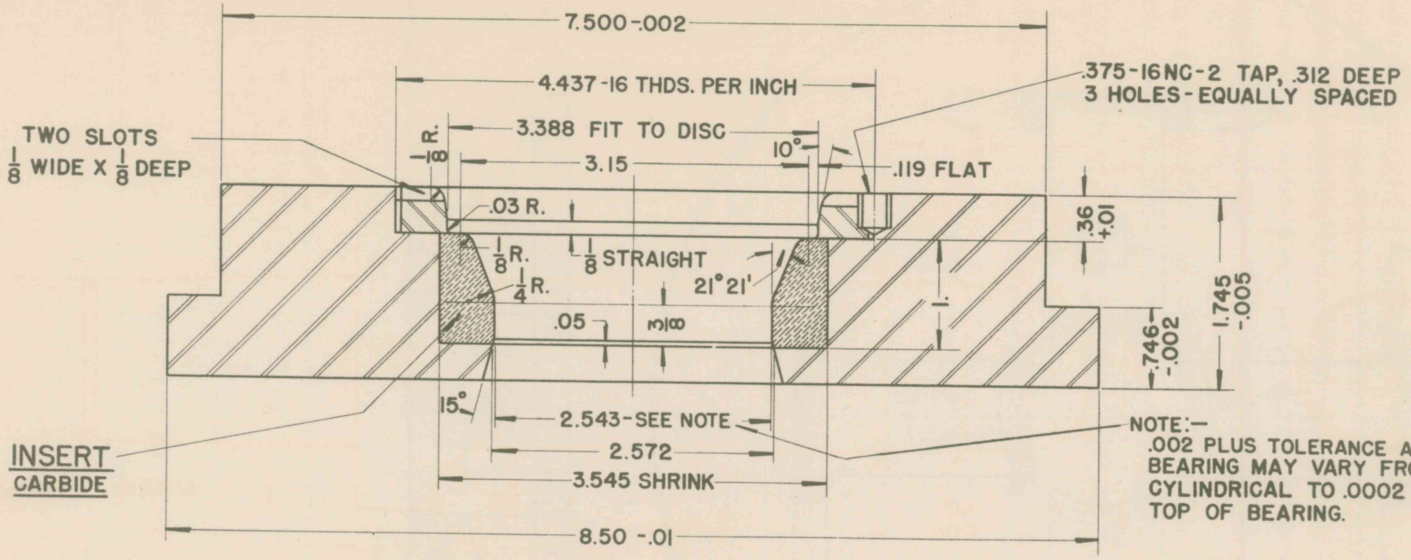

NOTE:-
.002 PLUS TOLERANCE ALLOWED ON DIA., BEARING MAY VARY FROM ABSOLUTE CYLINDRICAL TO .0002 OVERSIZE AT TOP OF BEARING.

DIE
MACH. STEEL
3-SCREWS, HOLLOW HD. SET, .375-16 NC-2 X .312 LONG.

NOTE:-
DIA. 2.543, DIA. 3.388 & DIA. 7.500 MUST BE CONCENTRIC WITH EACH OTHER.

PERTAINS TO		
DRAWING NO.	PIECE MARK	REV. DATE
71-2-96	96A	4-18-40
71-2-100	100A	4-18-40

R-271-3A

REVISIONS

CASE, CARTRIDGE, 37 MM., M16 & M17
OPERATION:- CUP

FRANKFORD ARSENAL MAY 1, 1940

SUBMITTED
CAPT. ORD. DEPT., U. S. A.

APPROVED
ORD. DEPT., U. S. A.

DRAFTSMAN	TRACER	DIR. OF DRAWING
CHECKER	CHECKER	CH'T DR'SMAN
	CKS	

FB17190

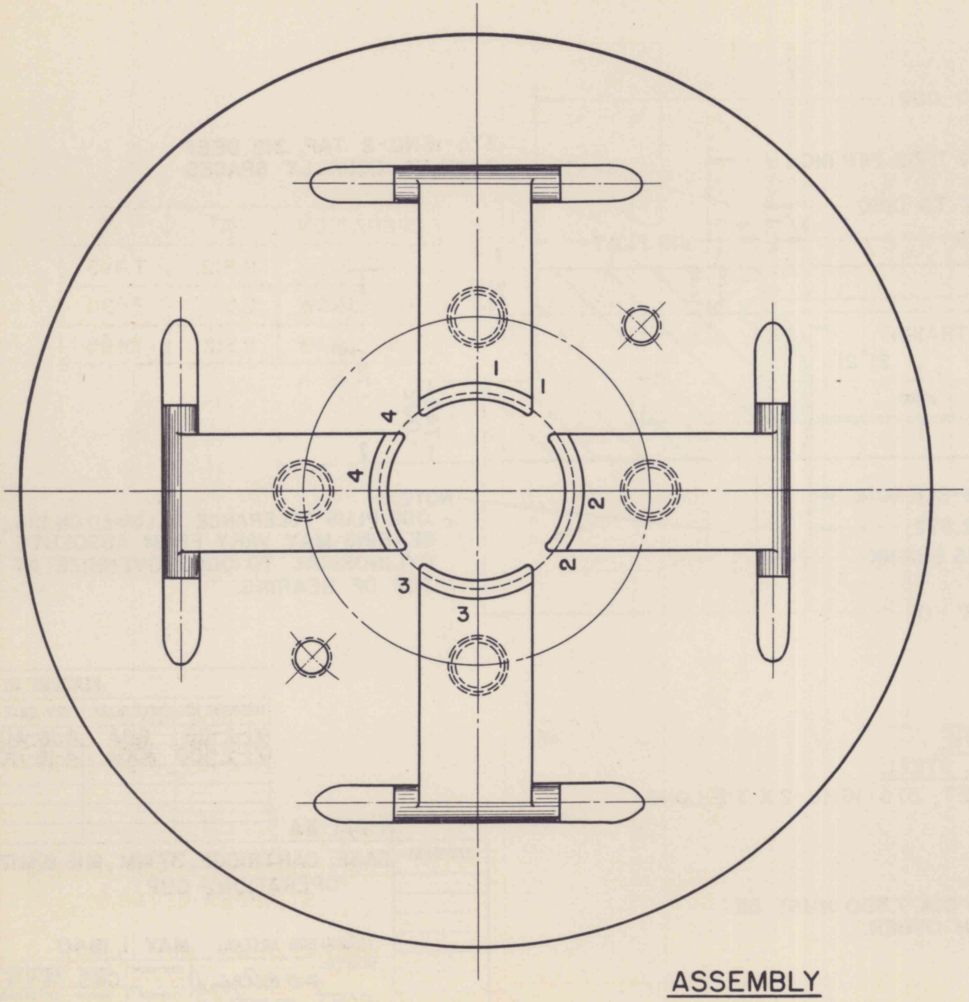

ASSEMBLY

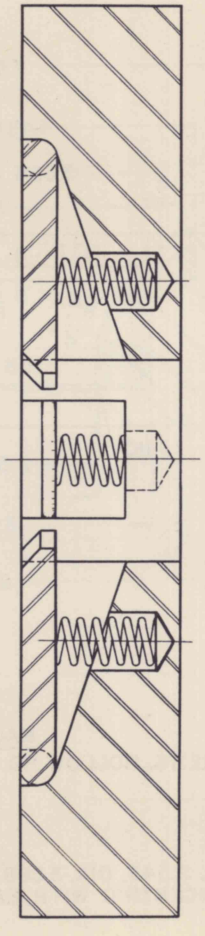

PERTAINS TO		
DRAWING NO.	PIECE MARK	REV. DATE
71-2-96	96A	4-18-40
71-2-100	100A	4-18-40

R-271-15

REVISIONS

CASE, CARTRIDGE, 37 MM., M16 & M17

STRIPPER ASSEMBLY

FRANKFORD ARSENAL MAY 1, 1940

SUBMITTED

CAPT. F.O.C. Alford ORD. DEPT. U. S. A.

APPROVED

ORD. DEPT. U. S. A.

DRAFTSMAN	TRACER	REGULATIONSMAN
CHECKER	F.D.A. CHECKER	W.R.S. CH'F DR'SMAN

FB17191

STAMP:-FB 17192

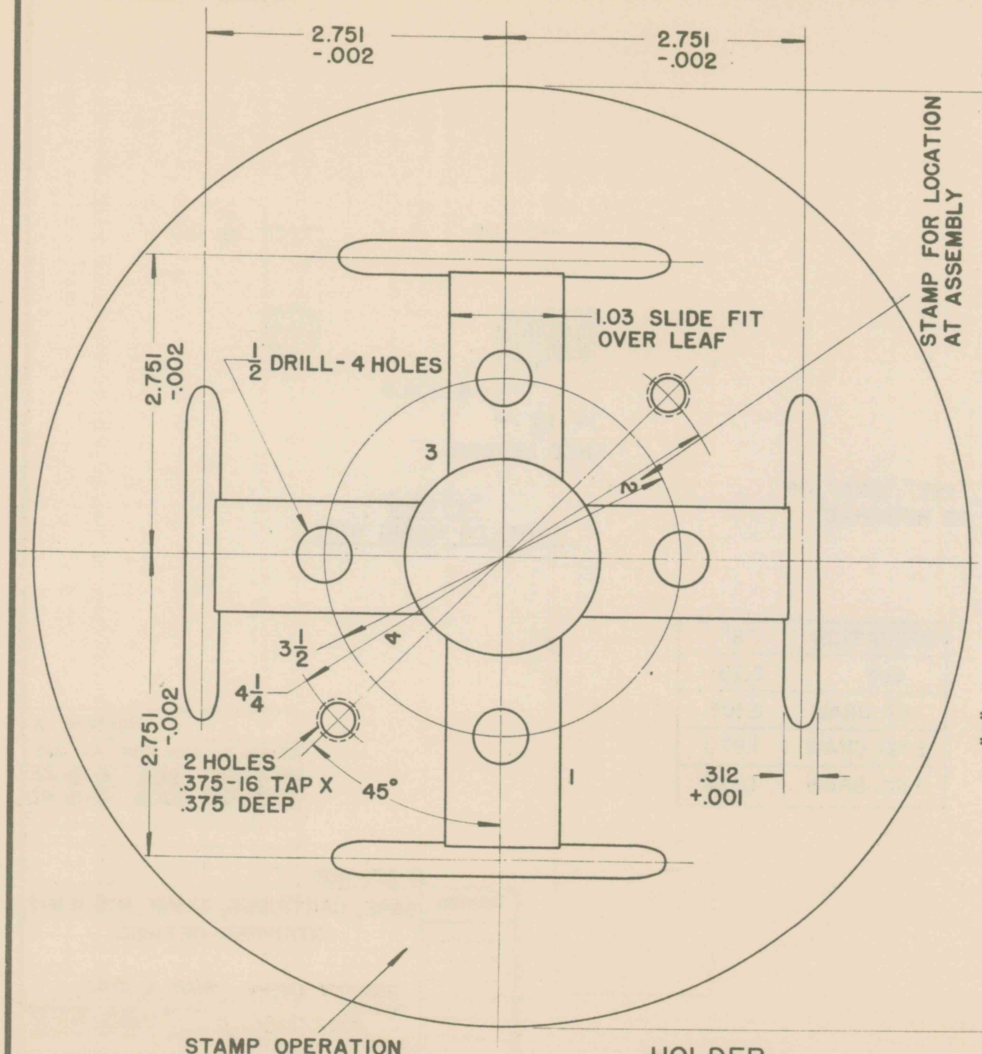

HOLDER
MACH. STEEL

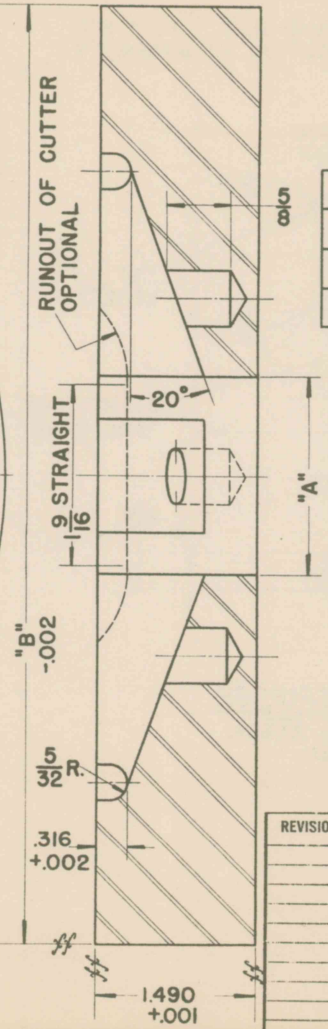

OPERATION	"A"	"B"
CUP	2.812	7.495
1ST. DRAW	2.5	7.495
2ND. DRAW	2.312	7.495

PERTAINS TO		
DRAWING NO.	PIECE MARK	REV. DATE
71-2-96	96A	4-18-40
71-2-100	100A	4-18-40

R-271-15A

REVISIONS

CASE, CARTRIDGE, 37MM., M16 & M17
STRIPPER DETAILS

FRANKFORD ARSENAL MAY 1, 1940

SUBMITTED
CAPT. ORD. DEPT., U. S. A.

APPROVED
ORD. DEPT., U. S. A.

DRAFTSMAN	TRACER	LIEUT. COLONEL
CHECKER	CHECKER	CH'F DR'SMAN

FB17192

STAMP:-FB17193

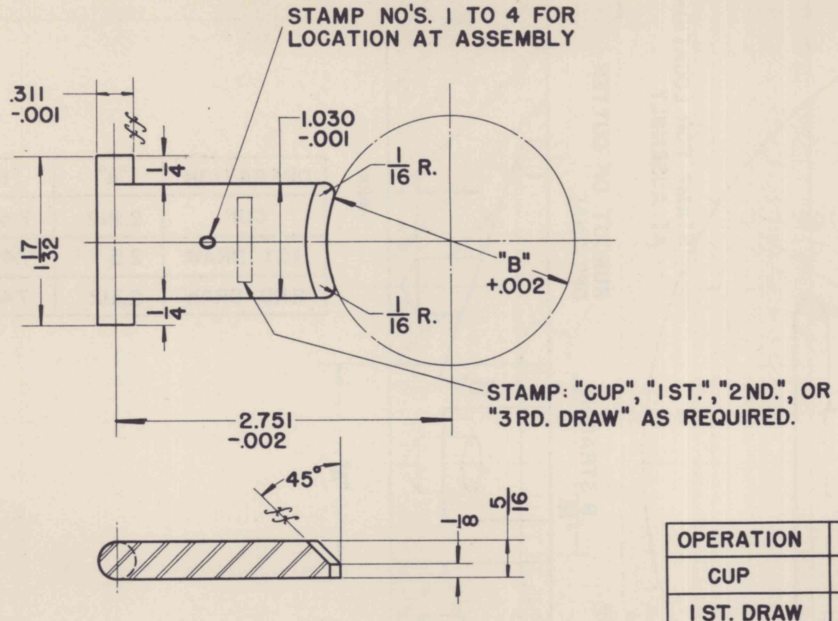

LEAF, STRIPPER
FOUR-TOOL STEEL
HARDEN

OPERATION	"B"
CUP	2.281
1 ST. DRAW	2.105
2 ND. DRAW	1.970
3 RD. DRAW	1.935

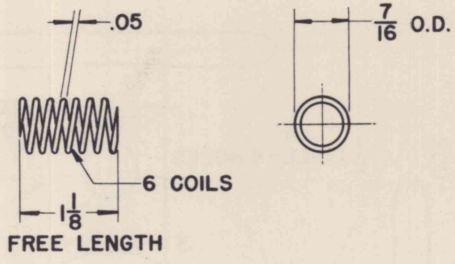

SPRING
FOUR-.05 MUSIC WIRE

PERTAINS TO		
DRAWING NO.	PIECE MARK	REV. DATE
71-2-96	96A	4-18-40
71-2-100	100A	4-18-40

R-271-15 B

REVISIONS

CASE, CARTRIDGE, 37 MM., M16 & M17
STRIPPER DETAILS

FRANKFORD ARSENAL MAY 1, 1940

SUBMITTED
CAPT. ORD. DEPT., U. S. A.

DRAFTSMAN | TRACER | HEAD OF DRAW
CHECKER | CHECKER | CH'F DR'SMAN

APPROVED
ORD. DEPT., U. S. A.

FB17193

MARKING:—
37 M.M. CARTRIDGE CASE, M16 & M17
71-2-96 & 71-2-100-INSIDE DIA. OF DIE-CUP WORK
FB17194

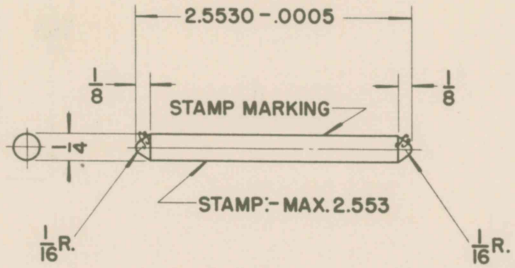

PIN GAGE
TOOL STEEL
HARDEN

PERTAINS TO		
DRAWING NO.	PIECE MARK	REV. DATE
71-2-96	96A	4-18-40
71-2-100	100A	4-18-40

FOR CHECK GAGE SEE DRAWING FB 11175 (5)
A = 2.553 CHECK FOR MAX.

LAP ∫9 SURFACES
REMOVE ALL SHARP EDGES

REVISIONS	CASE, CARTRIDGE, 37 M.M., M16 & M17 GAGE FOR INSIDE DIA. OF CUPPING DIE FRANKFORD ARSENAL MAY 1, 1940			
	SUBMITTED F. C. Allard CAPT. ORD. DEPT., U. S. A.	DRAFTSMAN A. A. G. CHECKER	TRACER RJ CHECKER	LOCG DR'SMAN W. R. G. CH'T DR'SMAN
	APPROVED ORD. DEPT., U. S. A.	FB17194		

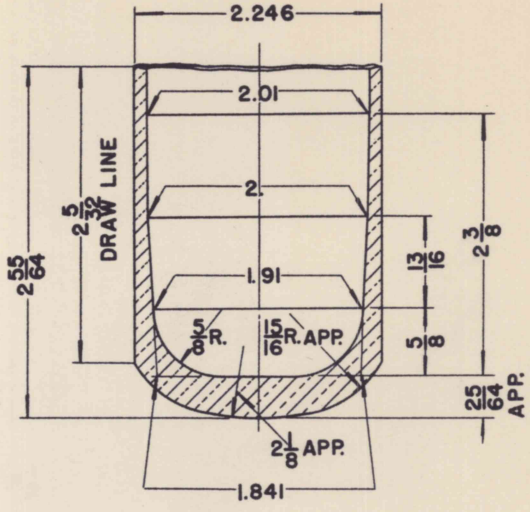

OPERATION NO. 3

This operation is performed in the same manner as Operation No. 1, using a dial feed and mechanical press. The cups are dipped into the lubricating solution and then placed in the nest of the dial. Annealing and pickling operation after drawing is the same as stated under Operation No. 2.

The desired grain size after annealing is between .050 mm. and .100 mm. at 75 magnifications.

PERTAINS TO		
DRAWING NO.	PIECE MARK	REV. DATE
71-2-96	96A	4-18-40
71-2-100	100A	4-18-40

R-271-1C

REVISIONS

CASE, CARTRIDGE, 37MM., M16 & M17
OPERATION:-
FIRST DRAW

FRANKFORD ARSENAL MAY 1, 1940

SUBMITTED F.C. Alford
CAPT. ORD. DEPT., U. S. A.

APPROVED
ORD. DEPT., U. S. A.

DRAFTSMAN	TRACER	L'ND DR'SMAN
H.J.G.	H.J.G.	A.K.L.
CHECKER	CHECKER	CH'F DR'SMAN

FB17195

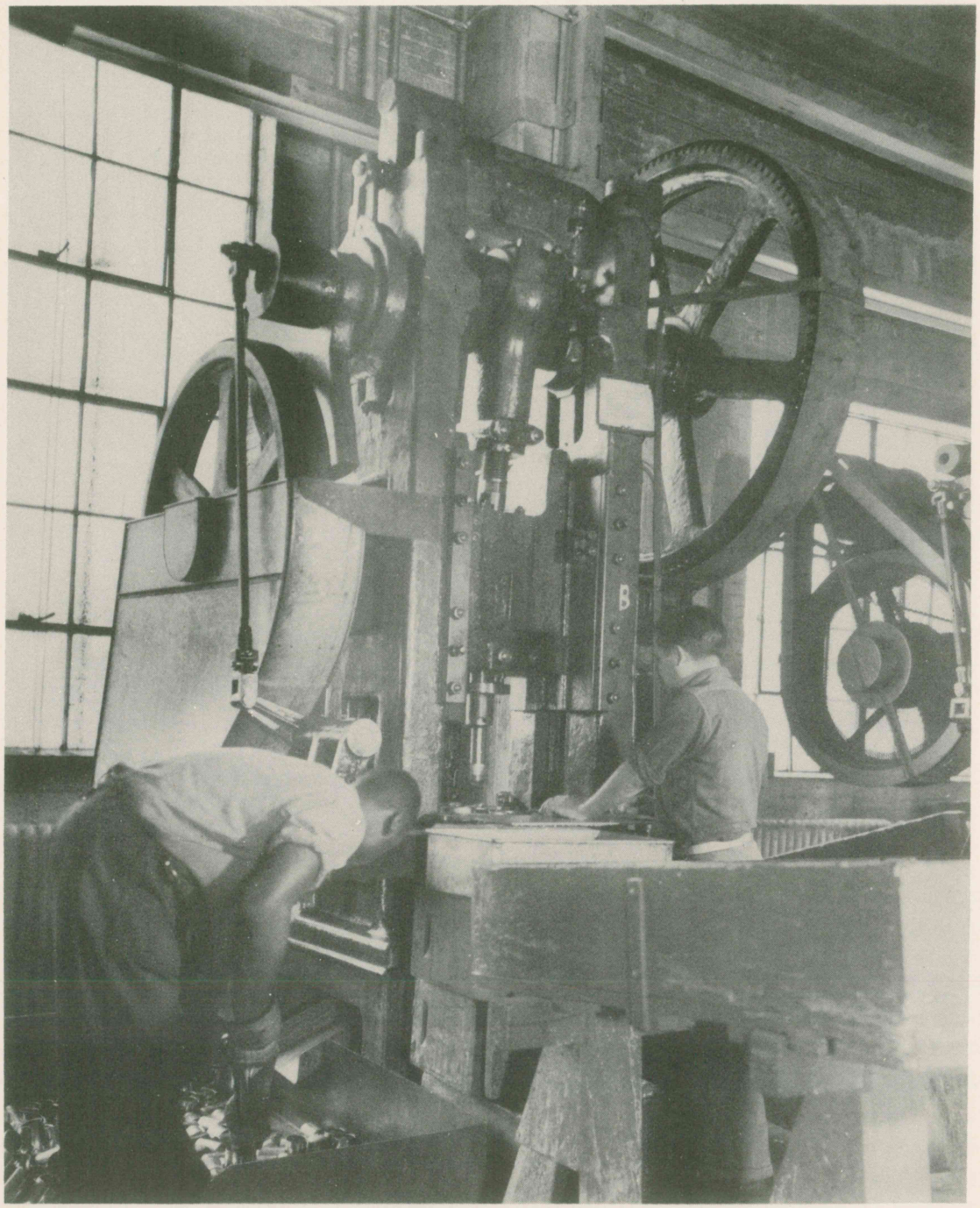

FIRST DRAW
37 M.M. CARTRIDGE CASE

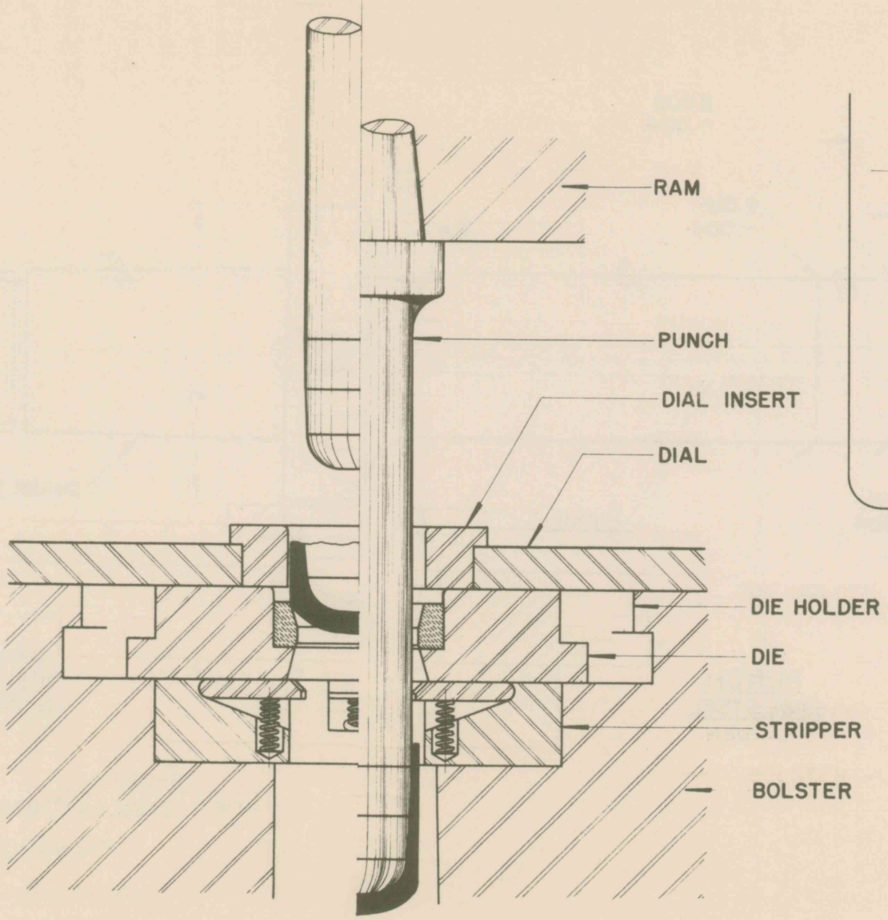

SETUP SKETCH
TAKEN THRU SECTION A-A

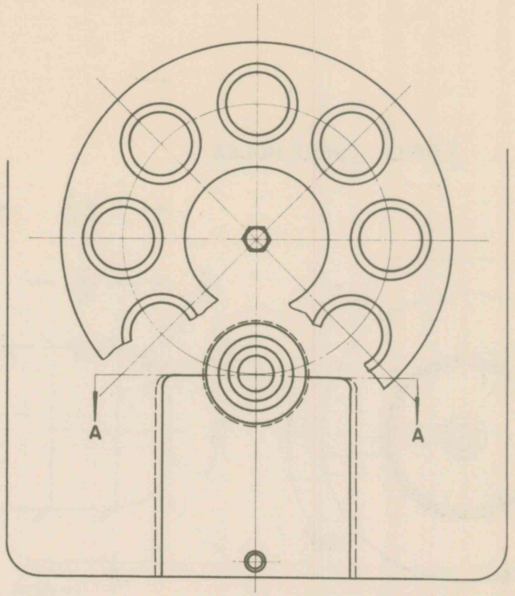

TOP VIEW

PERTAINS TO		
DRAWING NO.	PIECE MARK	REV. DATE
71-2-96	96A	4-18-40
71-2-100	100A	4-18-40

REVISIONS

CASE, CARTRIDGE, 37 MM., M16 & M17
OPERATION:-FIRST DRAW

FRANKFORD ARSENAL MAY 1, 1940

SUBMITTED
CAPT. ORD. DEPT. U. S. A.
APPROVED
ORD. DEPT., U. S. A.

DRAFTSMAN | TRACER | LAYOUTMAN
CHECKER | CHECKER | CH'T DR'SMAN

FB17196

STAMP:-FB17197

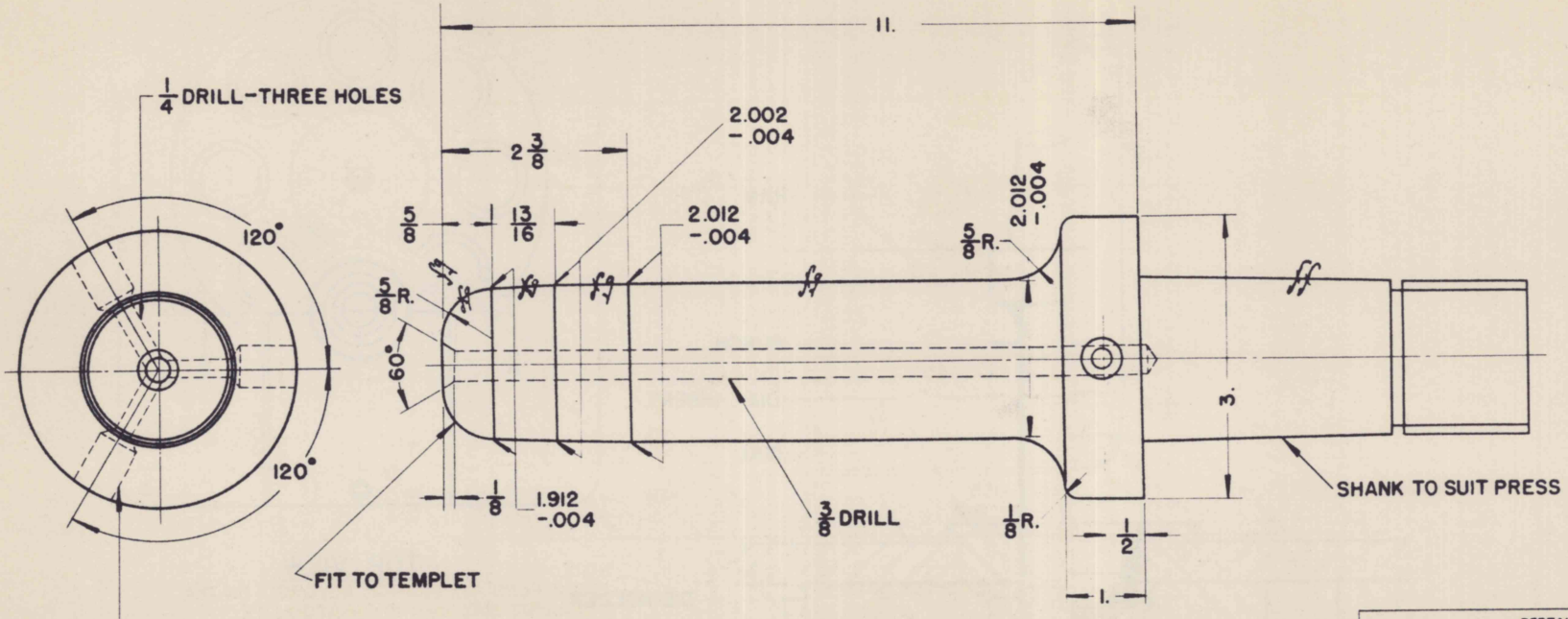

PUNCH
TOOL STEEL
HARDEN

PERTAINS TO		
DRAWING NO.	PIECE MARK	REV. DATE
71-2-96	96A	4-18-40
71-2-100	100A	4-18-40

R-271-4

REVISIONS

CASE, CARTRIDGE, 37MM., M16 & M17

OPERATION:-FIRST DRAW

FRANKFORD ARSENAL MAY 1, 1940

SUBMITTED F.O.C. Allard CAPT. ORD. DEPT. U.S.A.

APPROVED ORD. DEPT., U.S.A.

DRAFTSMAN | TRACER F.D.R. | DR'S FOREMAN M.A.A.

CHECKER | CHECKER | CH'F DR'SMAN

FB17197

STAMP:—FB 17198

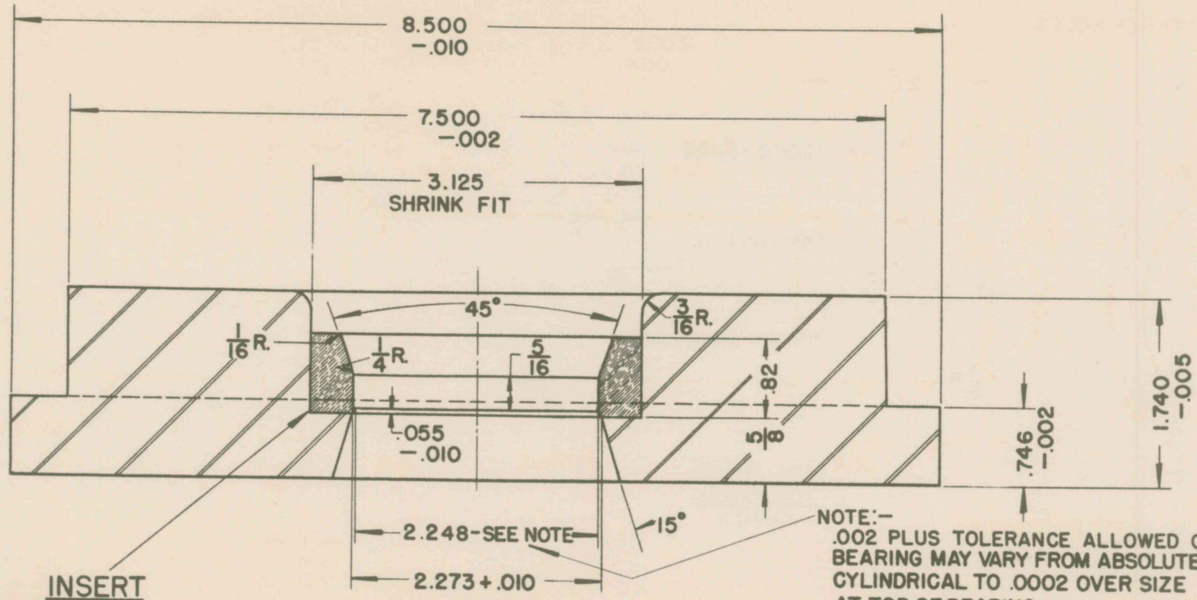

NOTE:—
.002 PLUS TOLERANCE ALLOWED ON DIA. BEARING MAY VARY FROM ABSOLUTE CYLINDRICAL TO .0002 OVER SIZE AT TOP OF BEARING

DIE
MACH. STEEL

NOTE:—
2.248 DIA., 3.125 DIA. & 7.500 DIA. MUST BE CONCENTRIC WITH EACH OTHER WITHIN .001 TOTAL INDICATED RUN OUT

PERTAINS TO		
DRAWING NO.	PIECE MARK	REV. DATE
71-2-96	96A	4-18-40
71-2-100	100A	4-18-40

R-271-5A

REVISIONS

CASE, CARTRIDGE, 37 MM., M16 & M17

OPERATION:-FIRST DRAW

FRANKFORD ARSENAL MAY 1, 1940

SUBMITTED F.D.C. Agard
CAPT. ORD. DEPT. U. S. A.

APPROVED
ORD. DEPT., U. S. A.

DRAFTSMAN	TRACER	DESIGN DRAW
	F.D.A.	M.A.A.
CHECKER	CHECKER	CH'T DR'SMAN

FB 17198

MARKING:-
37 M.M. CARTRIDGE CASE, M16 & M17
71-2-96 & 71-2-100-INSIDE DIA. OF DIE-IST DRAW WORK
FB 17199

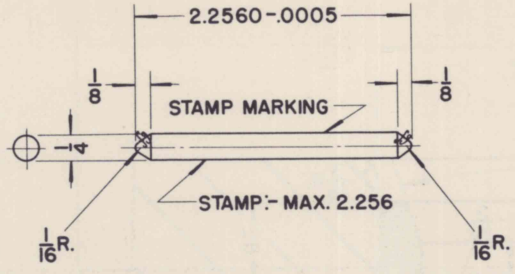

PIN GAGE
TOOL STEEL
HARDEN

PERTAINS TO		
DRAWING NO.	PIECE MARK	REV. DATE
71-2-96	96A	4-18-40
71-2-100	100A	4-18-40

FOR CHECK GAGE SEE DRAWING FB 11175 (5)
A=2.256 CHECK FOR MAX.

LAP ∫9 SURFACES
REMOVE ALL SHARP EDGES

REVISIONS	CASE, CARTRIDGE, 37 M.M., M16 & M17 GAGE FOR INSIDE DIA. OF IST DRAW DIE
	FRANKFORD ARSENAL MAY 1, 1940
	SUBMITTED CAPT. ORD. DEPT., U. S. A. — DRAFTSMAN H.K.G. — TRACER RJ — LYNG OR DRAW H.K.G.
	CHECKER — CHECKER — CH'F OR SMAN
	APPROVED ORD. DEPT., U. S. A. — FB17199

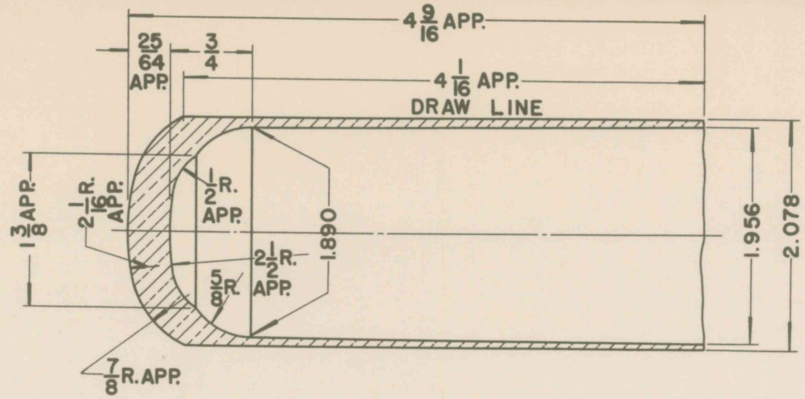

OPERATION NO. 5

This operation is performed in the same manner as Operation No. 1, using a dial feed and mechanical press. The cups are dipped into the lubricating solution and then placed in the nest of the dial. Annealing and pickling operation after drawing is the same as stated under Operation No. 2.

The desired grain size after annealing is between .050 mm. and .100 mm. at 75 magnifications.

PERTAINS TO		
DRAWING NO.	PIECE MARK	REV. DATE
71-2-96	96A	4-18-40
71-2-100	100A	4-18-40

R-271-ID

REVISIONS

CASE, CARTRIDGE, 37 MM., M16 & M17
OPERATION:-
SECOND DRAW

FRANKFORD ARSENAL MAY 1, 1940

SUBMITTED
F.D.C. Aspard
CAPT. ORD. DEPT., U. S. A.

APPROVED
ORD. DEPT., U. S. A.

DRAFTSMAN	TRACER	L'DG DRAFTSMAN
H.J.G.	H.J.G.	W.R.K.
CHECKER	CHECKER	CH'F DR'SMAN

FB17200

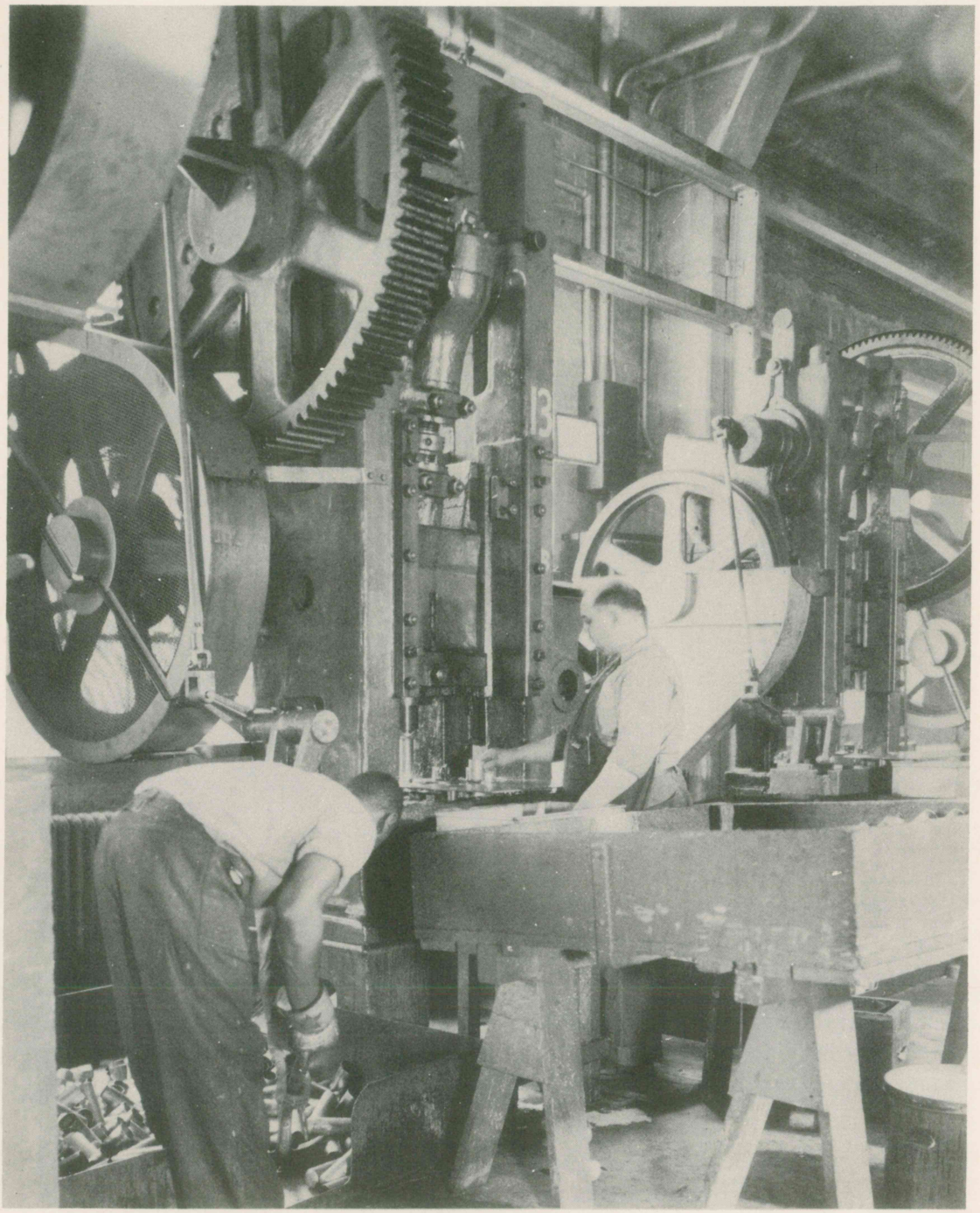

SECOND DRAW
37 M.M. CARTRIDGE CASE

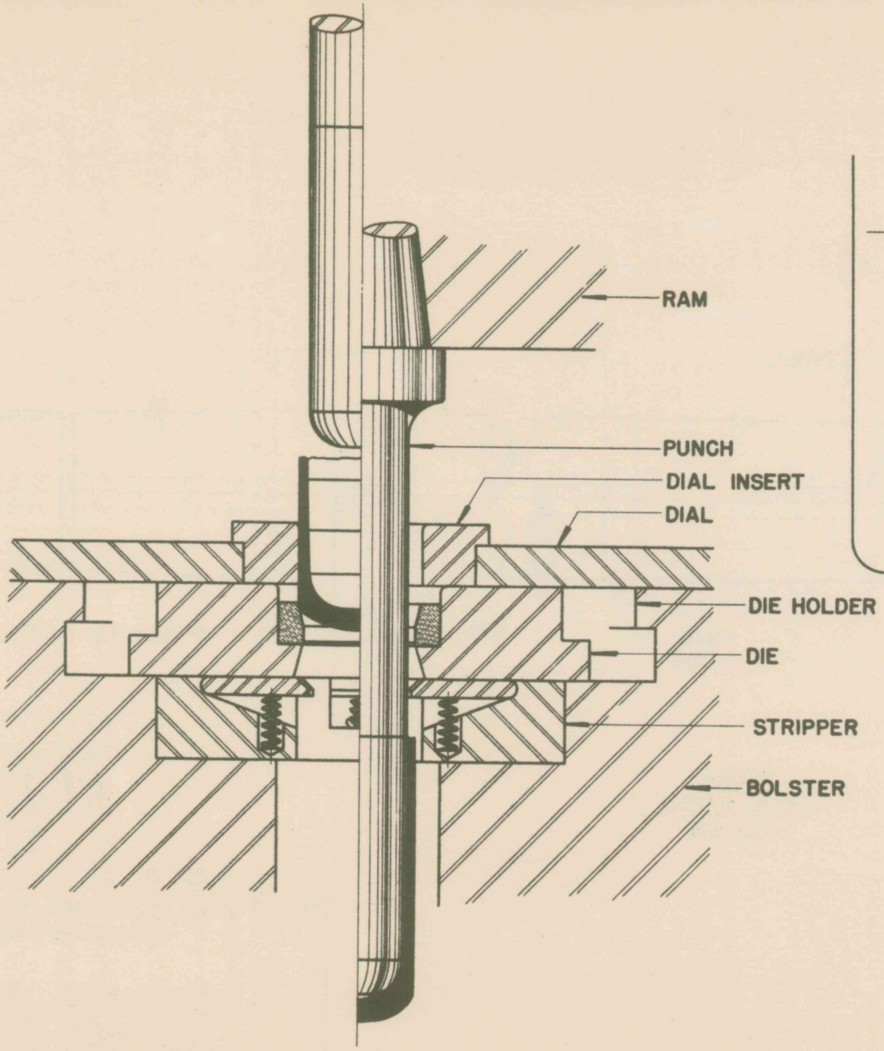

SETUP SKETCH
TAKEN THRU SECTION A-A

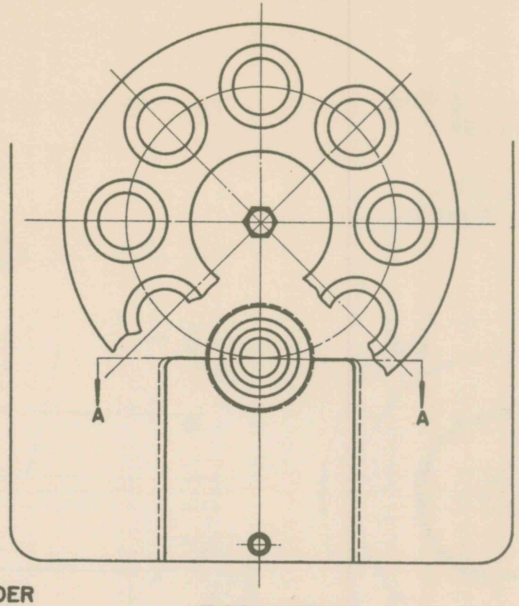

TOP VIEW

PERTAINS TO		
DRAWING NO.	PIECE MARK	REV. DATE
71-2-96	96A	4-18-40
71-2-100	100A	4-18-40

REVISIONS

CASE, CARTRIDGE, 37 MM., M 16 & M 17
OPERATION:-SECOND DRAW

FRANKFORD ARSENAL MAY 1, 1940

SUBMITTED
F. C. Alford
CAPT. ORD. DEPT., U. S. A.

APPROVED
ORD. DEPT., U. S. A.

DRAFTSMAN	TRACER	LAYER-OUT MAN
A.K.K.	CKS	A.K.K.
CHECKER	CHECKER	CH'F DR'SMAN

FB17201

STAMP:-FB17202

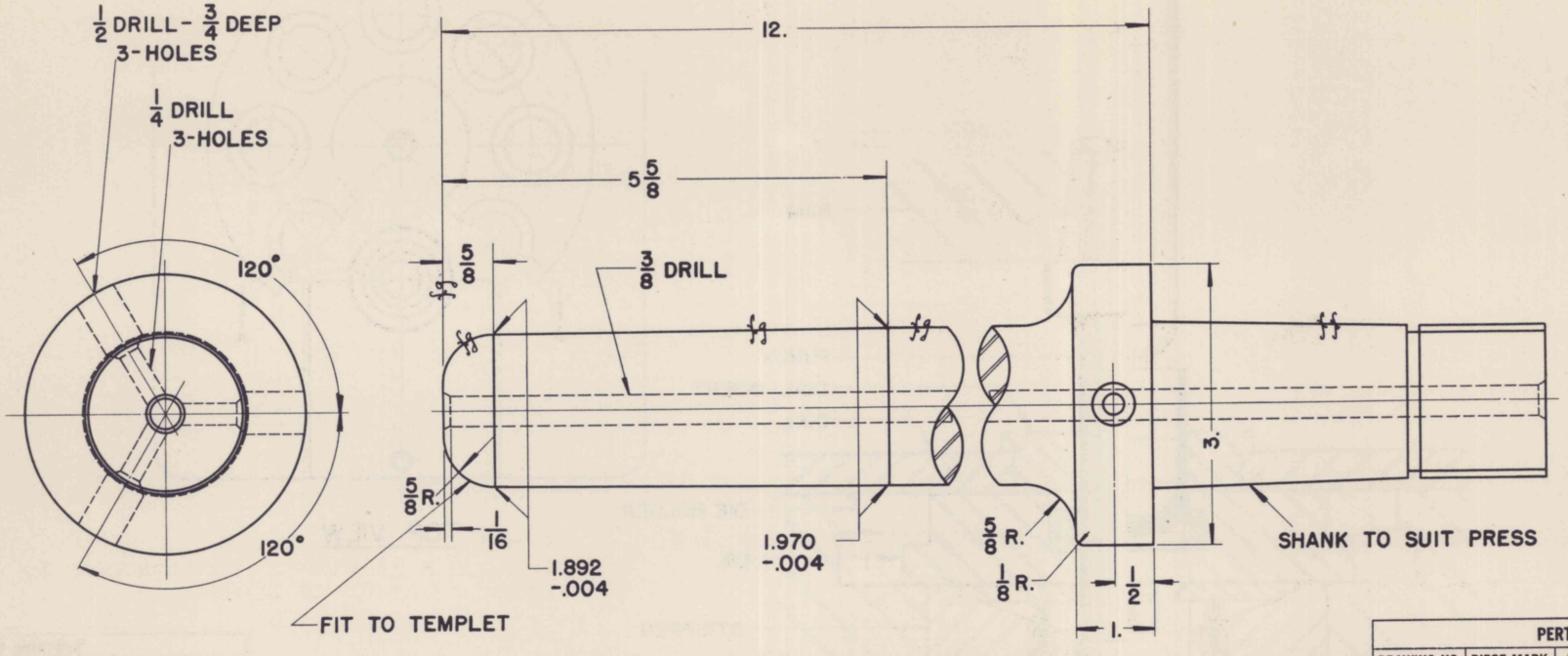

PUNCH
TOOL STEEL
HARDEN

PERTAINS TO		
DRAWING NO.	PIECE MARK	REV. DATE
71-2-96	96A	4-18-40
71-2-100	100A	4-18-40

R-271-6

REVISIONS

CASE, CARTRIDGE, 37 MM., M16 & M17
OPERATION:-SECOND DRAW

FRANKFORD ARSENAL MAY 1, 1940

SUBMITTED
F.O.C. Alford
CAPT. ORD. DEPT., U. S. A.

APPROVED
ORD. DEPT., U. S. A.

DRAFTSMAN | TRACER | LOCK DR'SMAN
CHECKER | CHECKER | CH'F DR'SMAN

FB17202

STAMP:-FB17203

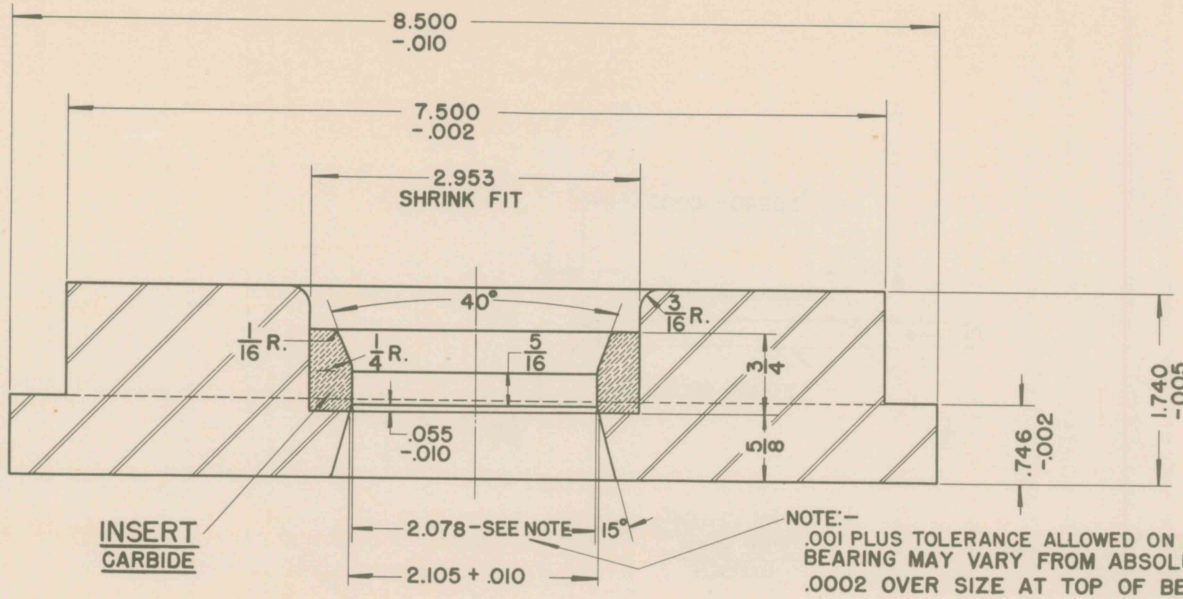

NOTE:-
.001 PLUS TOLERANCE ALLOWED ON DIA., BEARING MAY VARY FROM ABSOLUTE CYLINDRICAL TO .0002 OVER SIZE AT TOP OF BEARING.

DIE
MACH. STEEL

NOTE:-
2.078 DIA. & 2.953 DIA. & 7.500 DIA. MUST BE CONCENTRIC WITH EACH OTHER WITHIN .001 TOTAL INDICATED RUN OUT.

PERTAINS TO		
DRAWING NO.	PIECE MARK	REV. DATE
71-2-96	96A	4-18-40
71-2-100	100A	4-18-40

R-271-7A

REVISIONS

CASE, CARTRIDGE, 37MM., M16 & M17
OPERATION:-SECOND DRAW

FRANKFORD ARSENAL MAY 1, 1940

SUBMITTED Joe Alford
CAPT. ORD. DEPT., U. S. A.

DRAFTSMAN | TRACER | L'D'G DR'SMAN
CHECKER | CHECKER | CH'F DR'SMAN

APPROVED
ORD. DEPT., U. S. A.

FB17203

MARKING:-
37 M.M. CARTRIDGE CASE, M16 & M17
71-2-96 & 71-2-100-INSIDE DIA. OF DIE-2ND DRAW WORK
FB 17204

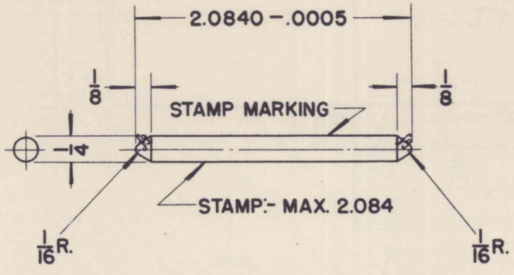

PIN GAGE
TOOL STEEL
HARDEN

PERTAINS TO		
DRAWING NO.	PIECE MARK	REV. DATE
71-2-96	96A	4-18-40
71-2-100	100A	4-18-40

FOR CHECK GAGE SEE DRAWING FB 11175 (5)
A = 2.084 CHECK FOR MAX.

LAP fg SURFACES
REMOVE ALL SHARP EDGES

REVISIONS	CASE, CARTRIDGE, 37 M.M., M16 & M17 GAGE FOR INSIDE DIA. OF 2ND DRAW DIE		
	FRANKFORD ARSENAL MAY 1, 1940		
	SUBMITTED F. C. Alford CAPT. ORD. DEPT., U. S. A.	DRAFTSMAN M.R.C. CHECKER	TRACER R. CHECKER	LAYOUT MAN O.K.S. CH'F DR'SMAN
	APPROVED ORD. DEPT., U. S. A.	FB17204		

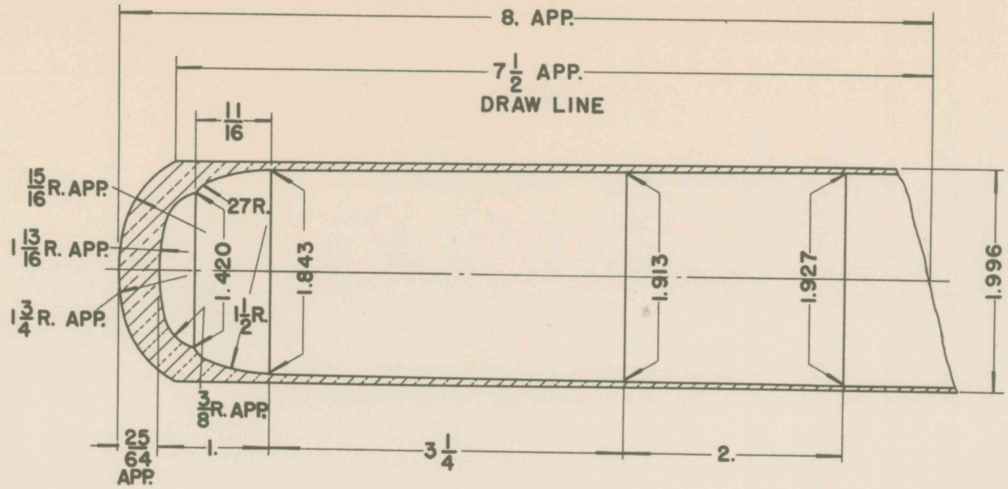

OPERATION NO. 7

This operation is performed in the same manner as Operation No. 1.

The desired grain size after annealing is between .030 mm. and .060 mm. at 75 magnifications.

PERTAINS TO		
DRAWING NO.	PIECE MARK	REV. DATE
71-2-96	96A	4-18-40
71-2-100	100A	4-18-40

R-271-1E

REVISIONS

CASE, CARTRIDGE, 37MM., M16 & M17
OPERATION:-
THIRD DRAW

FRANKFORD ARSENAL MAY 1, 1940

SUBMITTED F. C. Alford CAPT. ORD. DEPT., U. S. A.

APPROVED ORD. DEPT., U. S. A.

DRAFTSMAN H.J.G. CHECKER | TRACER H.J.G. CHECKER | LINE DETAILER W.R.S. CH'F DR'SMAN

FB17205

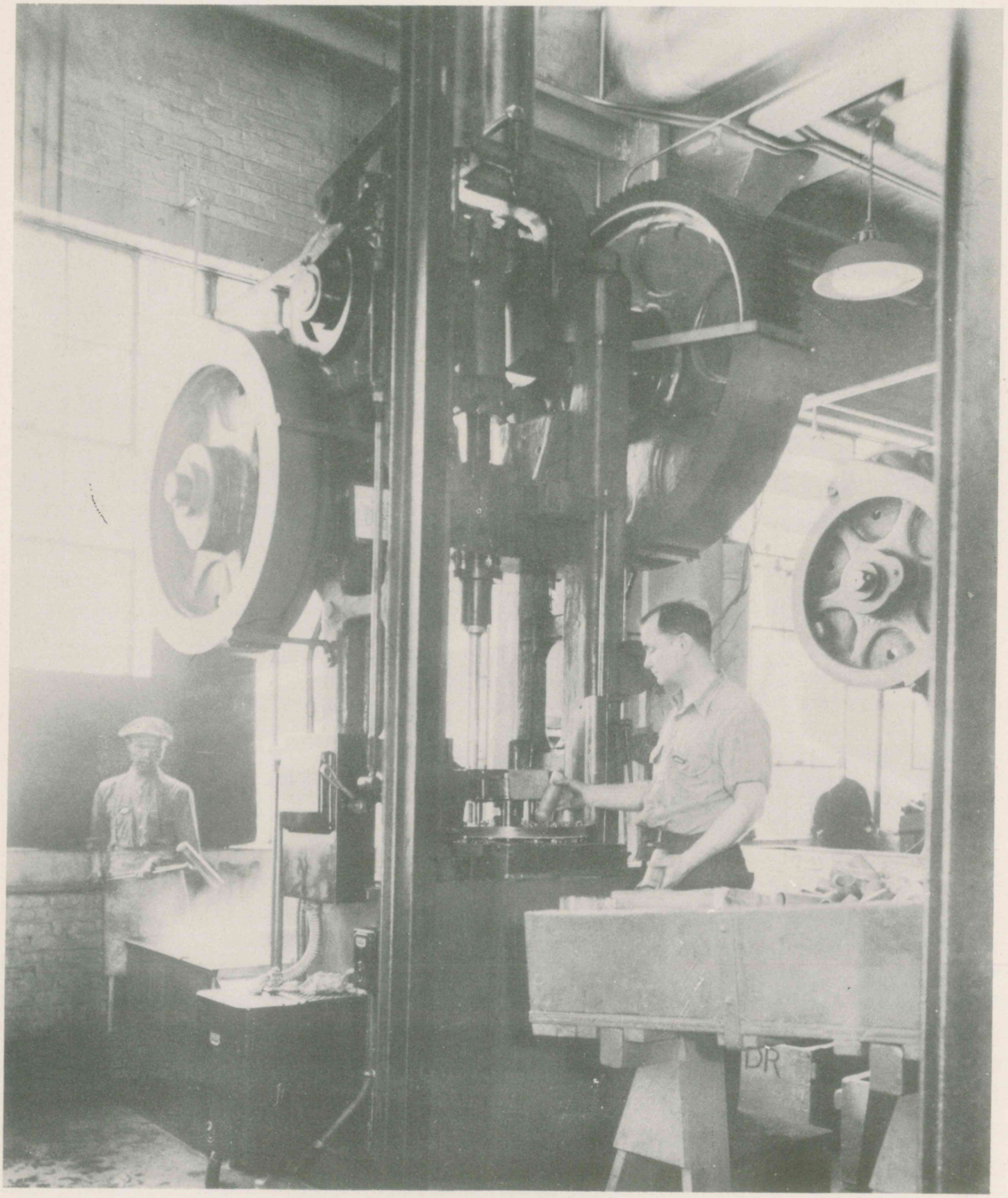

THIRD DRAW
37 M.M. CARTRIDGE CASE

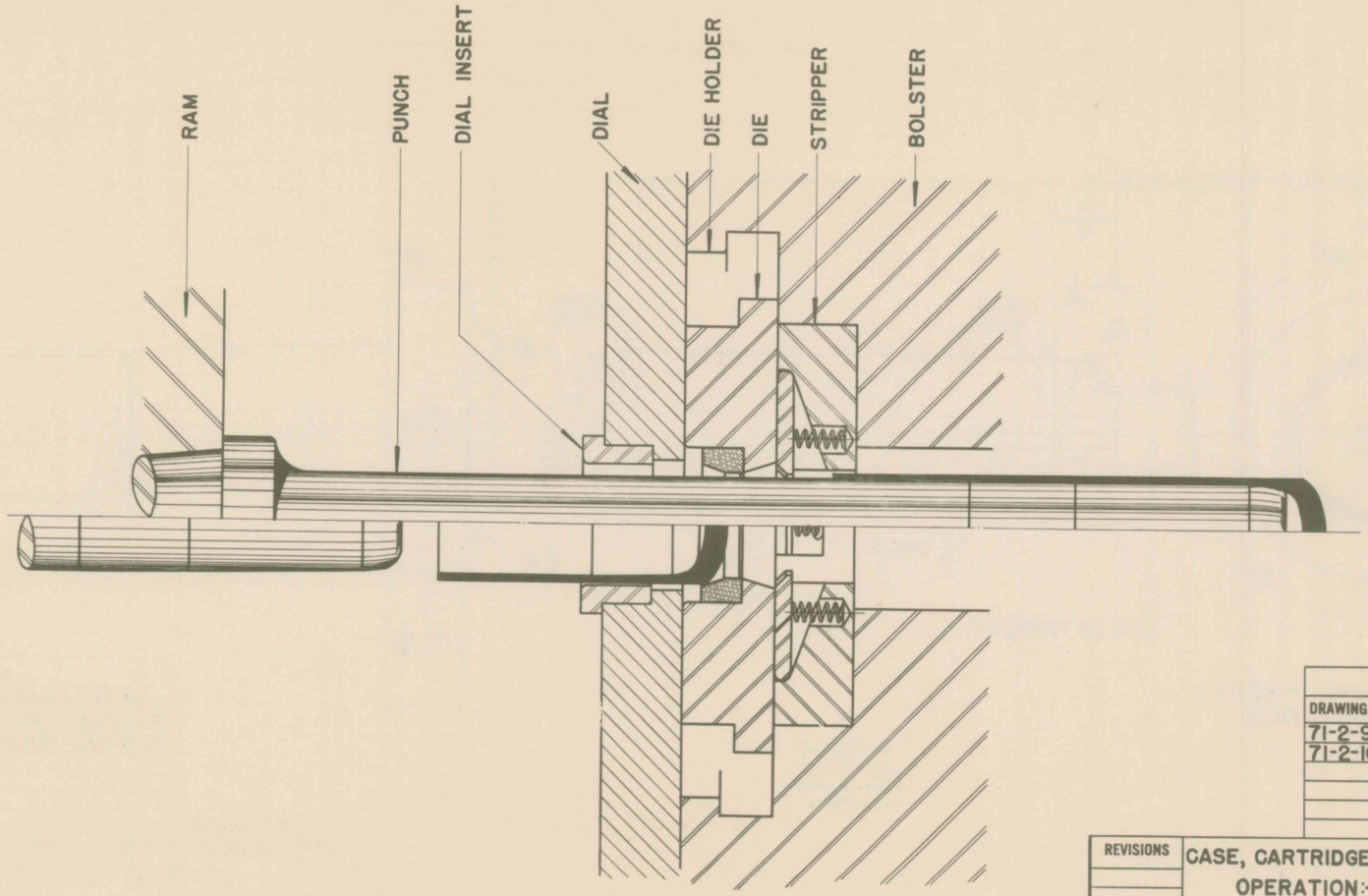

SETUP SKETCH

PERTAINS TO		
DRAWING NO.	PIECE MARK	REV. DATE
71-2-96	96A	4-18-40
71-2-100	100A	4-18-40

REVISIONS

CASE, CARTRIDGE, 37 MM., M16 & M17
OPERATION:-THIRD DRAW

FRANKFORD ARSENAL MAY 1, 1940

SUBMITTED
F. O. C. Alford
CAPT. ORD. DEPT., U. S. A.

APPROVED
ORD. DEPT., U. S. A.

DRAFTSMAN	TRACER	LEAD'G DR'SMAN
CHECKER	CHECKER	CH'Y DR'SMAN

FB17206

STAMP:-FB17207

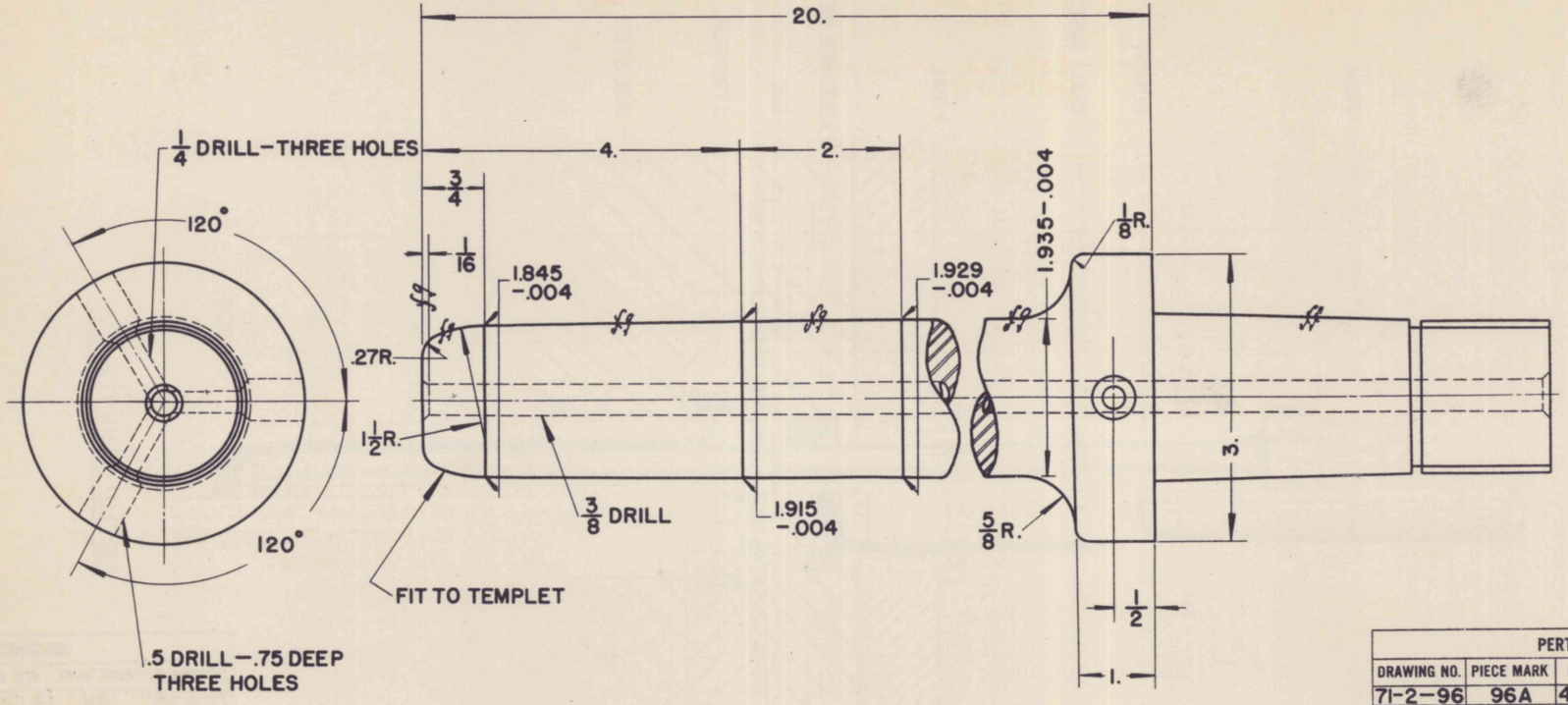

PUNCH
TOOL STEEL
HARDEN

PERTAINS TO		
DRAWING NO.	PIECE MARK	REV. DATE
71-2-96	96A	4-18-40
71-2-100	100A	4-18-40

R-271-9

REVISIONS

CASE, CARTRIDGE, 37 MM., M16 & M17
OPERATION:- THIRD DRAW

FRANKFORD ARSENAL MAY 1, 1940

SUBMITTED
F.O.C. Allard
CAPT. ORD. DEPT., U. S. A.
APPROVED
ORD. DEPT., U. S. A.

DRAFTSMAN	TRACER	HEAD OF DRAWING
CHECKER	CHECKER	CH'Y DR'SMAN
	F.O.A.	A.R.K.

FB17207

STAMP:-FB17208

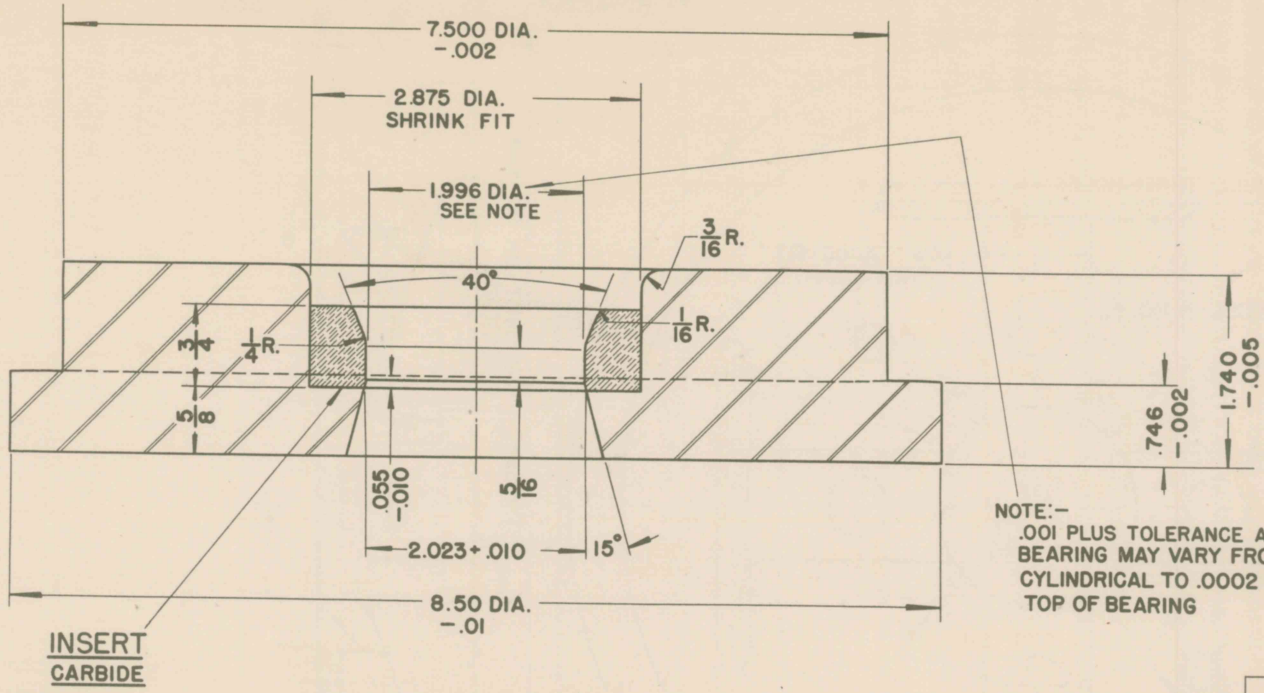

NOTE:-
.001 PLUS TOLERANCE ALLOWED ON DIA., BEARING MAY VARY FROM ABSOLUTE CYLINDRICAL TO .0002 OVER SIZE AT TOP OF BEARING

DIE
MACH. STEEL

NOTE:-
1.996 DIA., 2.875 DIA. & 7.500 DIA. MUST BE CONCENTRIC WITH EACH OTHER WITHIN .001 TOTAL INDICATED RUN OUT

PERTAINS TO		
DRAWING NO.	PIECE MARK	REV. DATE
71-2-96	96A	4-18-40
71-2-100	100A	4-18-40

R-271-10A

REVISIONS

CASE, CARTRIDGE, 37 MM., M16 & M17
OPERATION:- THIRD DRAW

FRANKFORD ARSENAL MAY 1, 1940

SUBMITTED
F. C. Ayers
CAPT. ORD. DEPT., U. S. A.

APPROVED
ORD. DEPT., U. S. A.

DRAFTSMAN | TRACER F.D.A. | ENGINEERING DRAFTSMAN
CHECKER | CHECKER | CH'F DR'SMAN

FB17208

STAMP:-FB17209

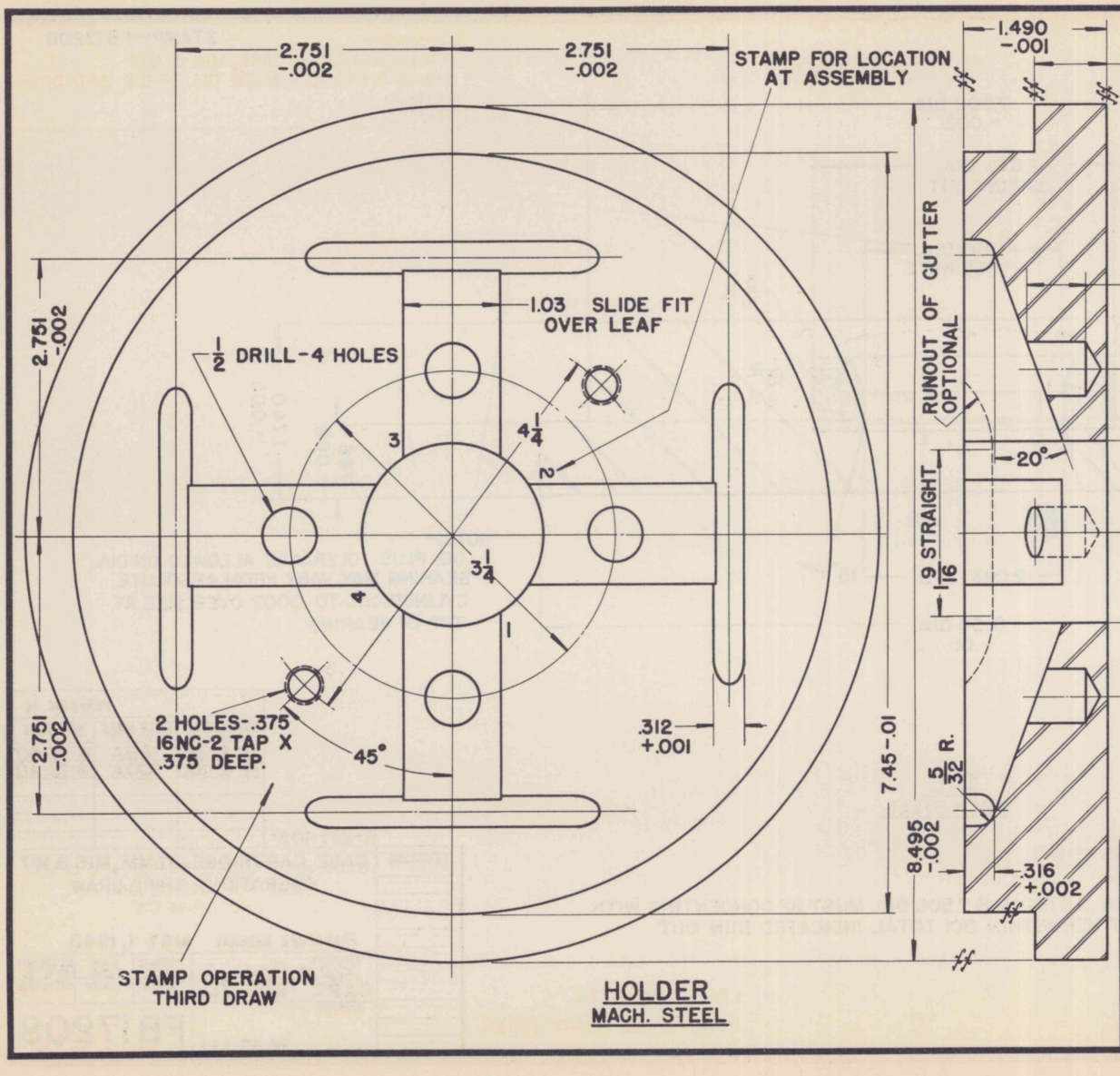

HOLDER
MACH. STEEL

PERTAINS TO		
DRAWING NO.	PIECE MARK	REV. DATE
71-2-96	96A	4-18-40
71-2-100	100A	4-18-40

R-271-15C

REVISIONS

CASE, CARTRIDGE, 37 MM., M16 & M17
STRIPPER DETAILS

FRANKFORD ARSENAL MAY 1, 1940

SUBMITTED
CAPT. ORD. DEPT., U. S. A.

APPROVED
ORD. DEPT., U. S. A.

DRAFTSMAN	TRACER	L'NG DR'SMAN
	CKS	
CHECKER	CHECKER	CH'F DR'SMAN

FB17209

MARKING:-
37 M.M. CARTRIDGE CASE, M16 & M17
71-2-96 & 71-2-100-INSIDE DIA. OF DIE-3RD. DRAW WORK
FB17210

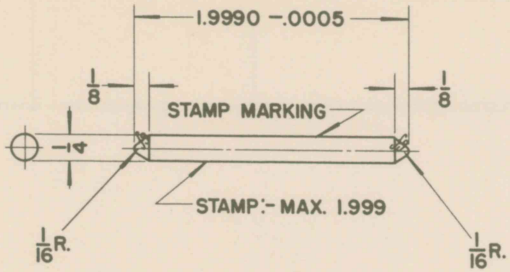

PIN GAGE
TOOL STEEL
HARDEN

PERTAINS TO		
DRAWING NO.	PIECE MARK	REV. DATE
71-2-96	96A	4-18-40
71-2-100	100A	4-18-40

FOR CHECK GAGE SEE DRAWING FB 11175 (5)
A= 1.999 CHECK FOR MAX.

LAP $\frac{5}{9}$ SURFACES
REMOVE ALL SHARP EDGES

REVISIONS

CASE, CARTRIDGE, 37M.M., M16 & M17
GAGE FOR INSIDE DIA. OF
3RD DRAW DIE

FRANKFORD ARSENAL MAY 1, 1940

SUBMITTED
CAPT. ORD. DEPT., U. S. A.

APPROVED
ORD. DEPT., U. S. A.

DRAFTSMAN	TRACER	LOCK OR SEAL
CHECKER	CHECKER	CH'F DR'SMAN

FB17210

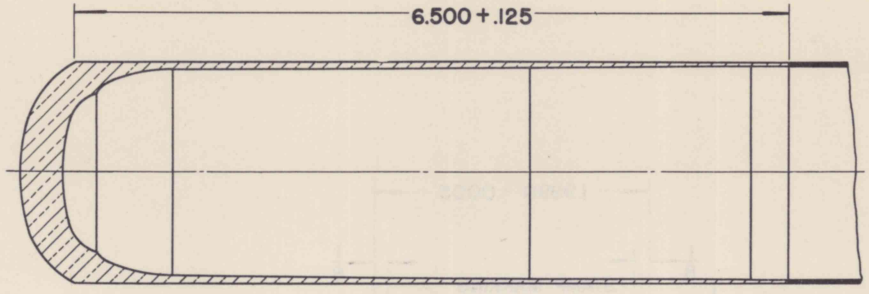

OPERATION NO. 8

This operation is performed in a V. and O. automatic cartridge case trimming machine specially designed for the purpose. The end of the case should be trimmed square and any burrs thrown up should be removed. If the cutter is sharp and properly adjusted, there should be no difficulty in eliminating the burr with the above described setup.

PERTAINS TO		
DRAWING NO.	PIECE MARK	REV. DATE
71-2-96	96A	4-18-40
71-2-100	100A	4-18-40

R-271-1F

REVISIONS

CASE, CARTRIDGE, 37 MM., M16 & M17
OPERATION:-
FIRST TRIM

FRANKFORD ARSENAL MAY 1, 1940

SUBMITTED
F. C. Alford
CAPT. ORD. DEPT., U. S. A.

APPROVED
ORD. DEPT., U. S. A.

DRAFTSMAN	TRACER	L'DG DR'SMAN
H.J.G.	H.J.G.	G. K. V.
CHECKER	CHECKER	CH'F DR'SMAN

FB17211

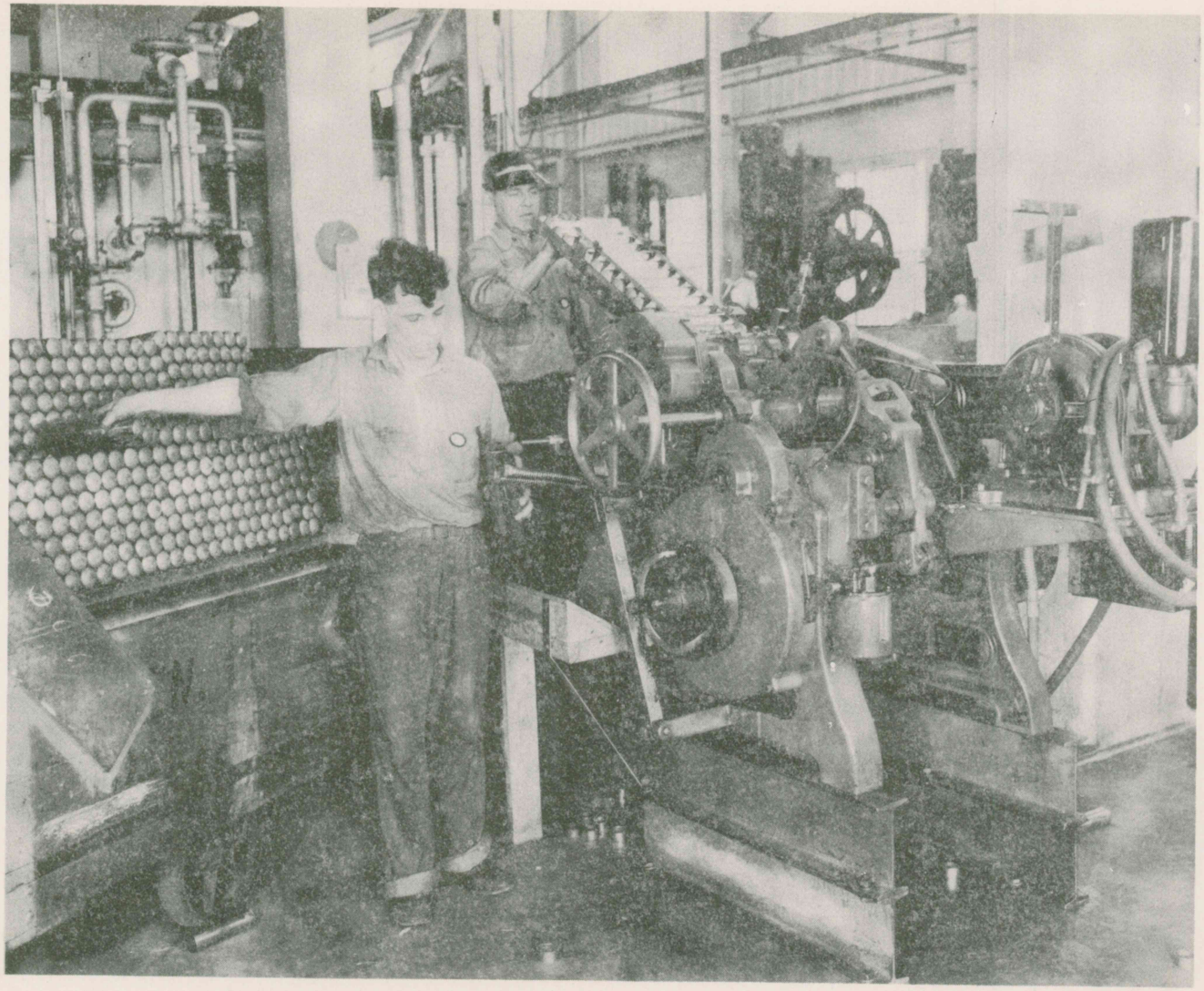

TRIM OPEN END
37 M.M. CARTRIDGE CASE

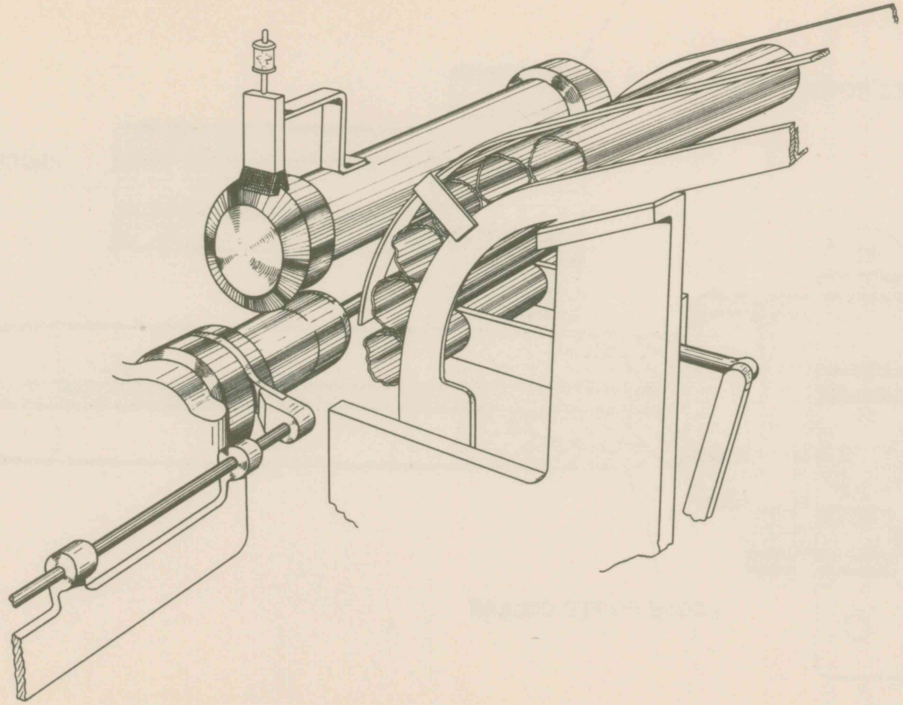

SETUP SKETCH

PERTAINS TO		
DRAWING NO.	PIECE MARK	REV. DATE
71-2-96	96A	4-18-40
71-2-100	100A	4-18-40

REVISIONS

CASE, CARTRIDGE, 37 MM., M16 & M17
OPERATION :- FIRST & SECOND TRIM

FRANKFORD ARSENAL MAY 1, 1940

SUBMITTED
T. P. Ayard
CAPT. ORD. DEPT., U. S. A.

APPROVED
ORD. DEPT., U. S. A.

DRAFTSMAN	TRACER	FOREMAN
CHECKER	CHECKER	CH'F DR'SMAN

FB17212

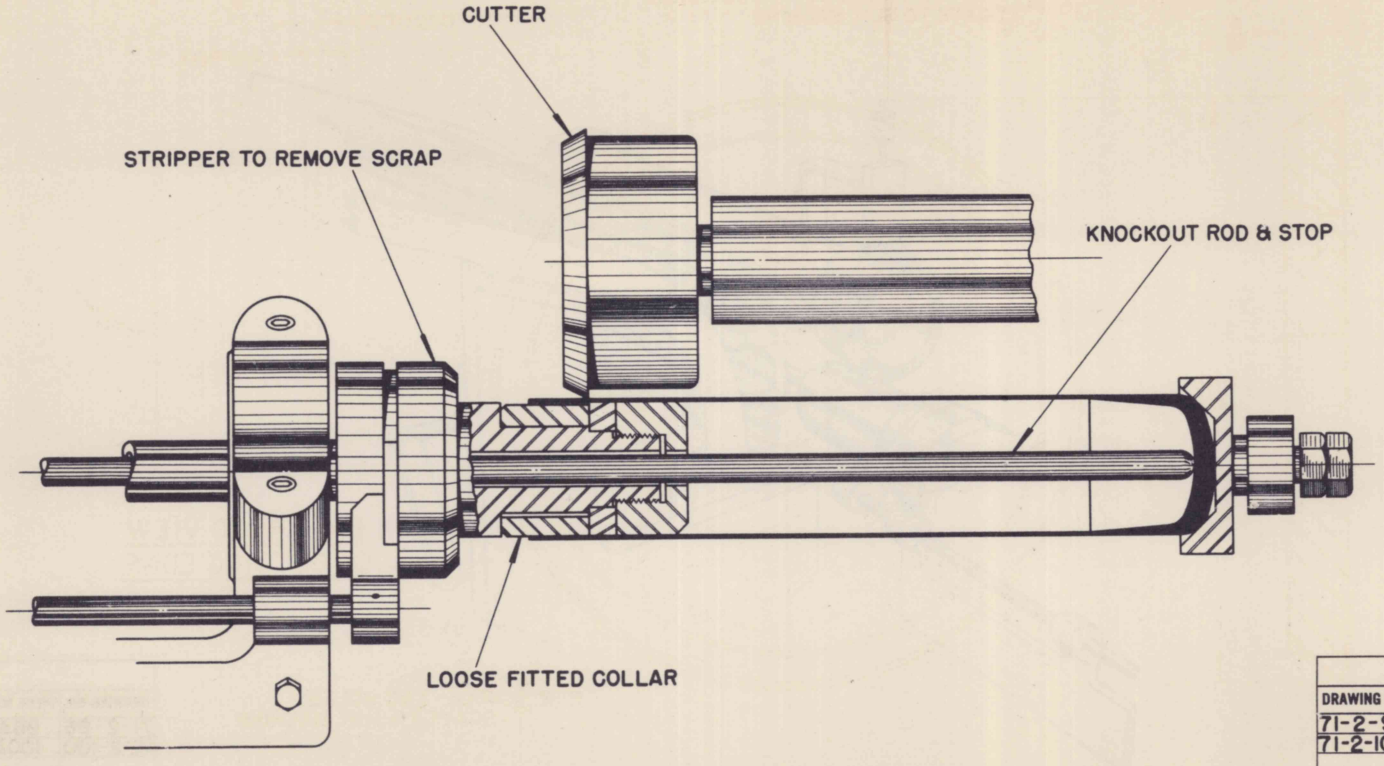

SETUP SKETCH

PERTAINS TO		
DRAWING NO.	PIECE MARK	REV. DATE
71-2-96	96A	4-18-40
71-2-100	100A	4-18-40

REVISIONS

CASE, CARTRIDGE, 37 MM., M16 & M17
OPERATION:- FIRST & SECOND TRIM

FRANKFORD ARSENAL MAY 1, 1940

SUBMITTED
F. C. Abbott
CAPT. ORD. DEPT., U. S. A.

APPROVED
ORD. DEPT., U. S. A.

DRAFTSMAN	DETAILED	CHECKMAN
CD	M.R.S.	M.R.S.
CHECKER	CHECKER	CH'T DR'SMAN

FB17213

STAMP:- FB17214

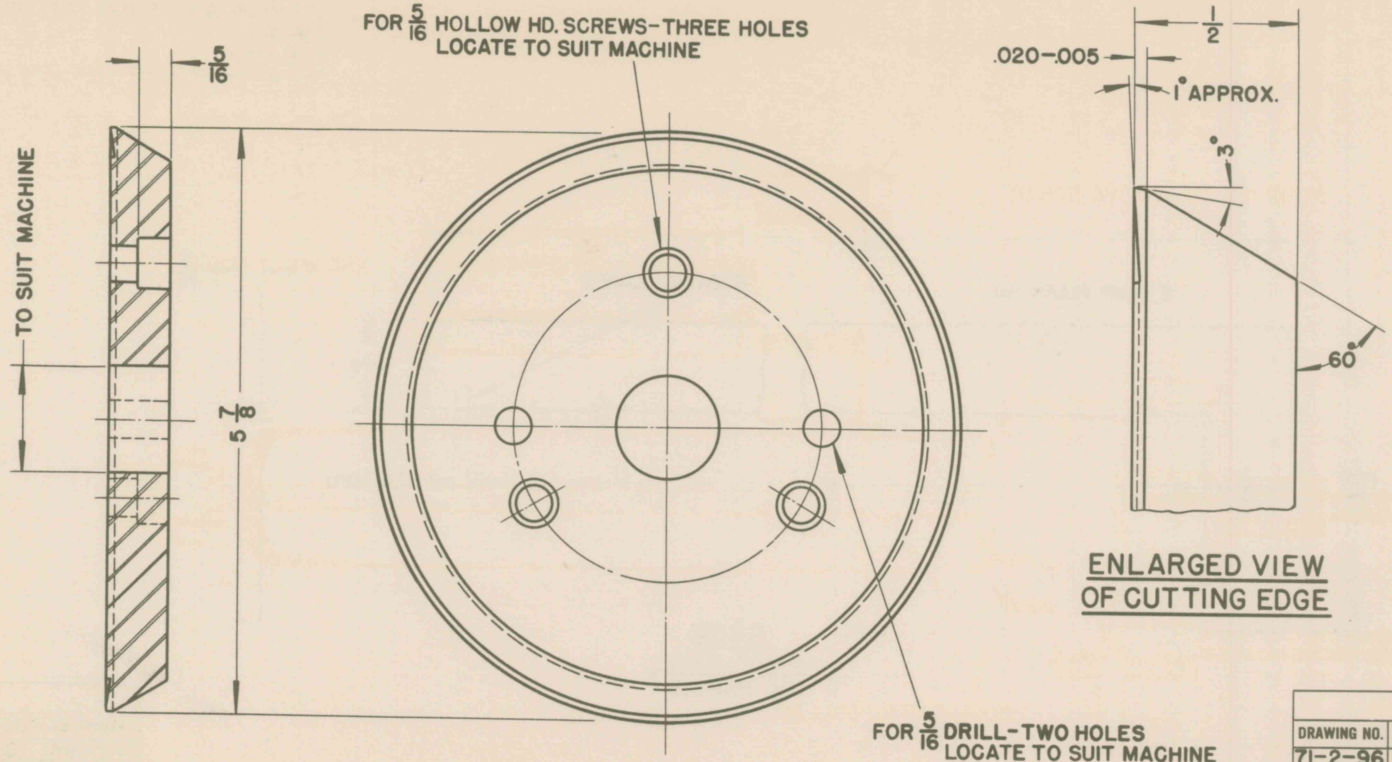

ENLARGED VIEW OF CUTTING EDGE

CUTTER
TOOL STEEL
HARDEN

PERTAINS TO		
DRAWING NO.	PIECE MARK	REV. DATE
71-2-96	96A	4-18-40
71-2-100	100A	4-18-40

REVISIONS

CASE, CARTRIDGE, 37MM., M16 & M17

OPERATION:- 1ST. & 2ND. TRIM

FRANKFORD ARSENAL MAY 1, 1940

SUBMITTED
CAPT. ORD. DEPT., U. S. A.

APPROVED
ORD. DEPT., U. S. A.

DRAFTSMAN	TRACER F.D.A.	LAYOUTSMAN
CHECKER	CHECKER	CH'F DR'SMAN

FB17214

MARKING:—
37 MM. CARTRIDGE CASE, M16 & M17
71-2-96 & 71-2-100 1ST. TRIM LENGTH
WORK
FB 17215

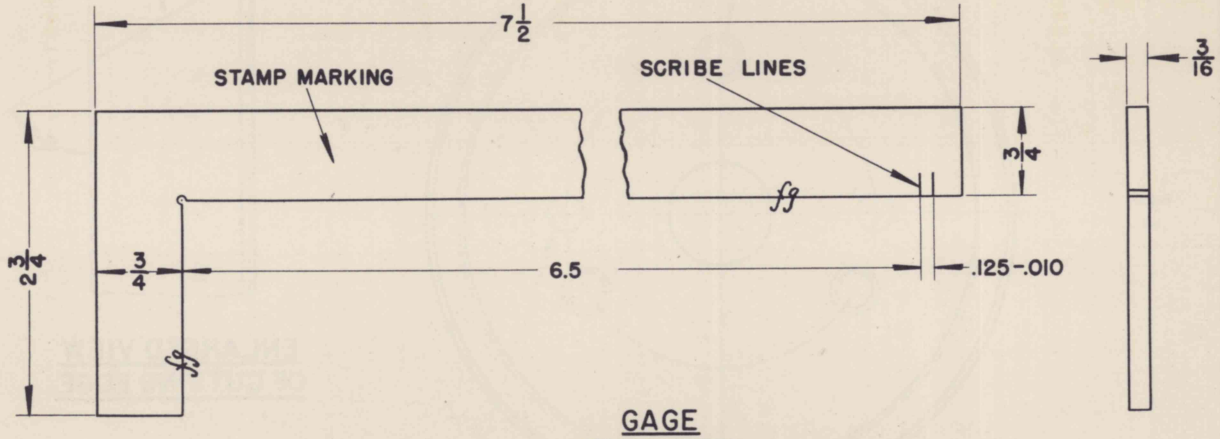

GAGE
MACH. STEEL
PK. HARDEN

PERTAINS TO		
DRAWING NO.	PIECE MARK	REV. DATE
71-2-96	96A	4-18-40
71-2-100	100A	4-18-40

REVISIONS	CASE, CARTRIDGE, 37 MM., M16 & M17
	GAGE FOR 1ST. TRIM LENGTH
	FRANKFORD ARSENAL MAY 1, 1940
	SUBMITTED F. C. Alford CAPT. ORD. DEPT., U. S. A. — DRAFTSMAN W.H.H. CHECKER — TRACER F.D.A. CHECKER — WORKSMAN W.H.H. CH'F DR'SMAN
	APPROVED ORD. DEPT., U. S. A. — FB17215

LAP fg SURFACES
REMOVE ALL SHARP EDGES

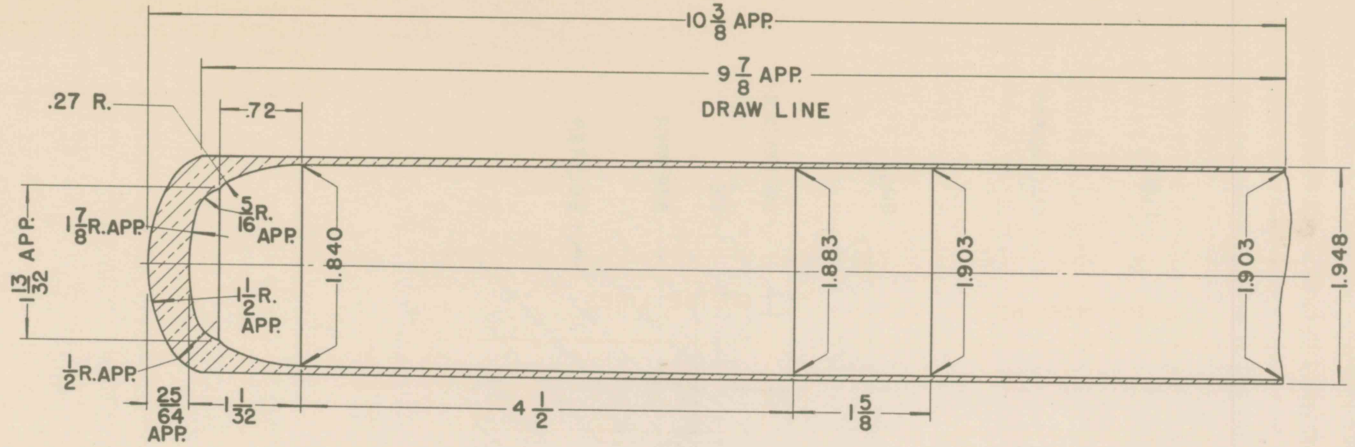

OPERATION NO. 10

This operation is performed in the same manner as Operation No. 7.

PERTAINS TO		
DRAWING NO.	PIECE MARK	REV. DATE
71-2-96	96A	4-18-40
71-2-100	100A	4-18-40

R-271-16

REVISIONS

CASE, CARTRIDGE, 37 MM., M16 & M17
OPERATION:-
FOURTH DRAW

FRANKFORD ARSENAL MAY 1, 1940

SUBMITTED
F. C. Aylard
CAPT. ORD. DEPT., U. S. A.

APPROVED
ORD. DEPT., U. S. A.

DRAFTSMAN	TRACER	L'D'G. DR'SMAN
H. J. G.	H. J. G.	
CHECKER	CHECKER	CH'F DR'SMAN

FB17216

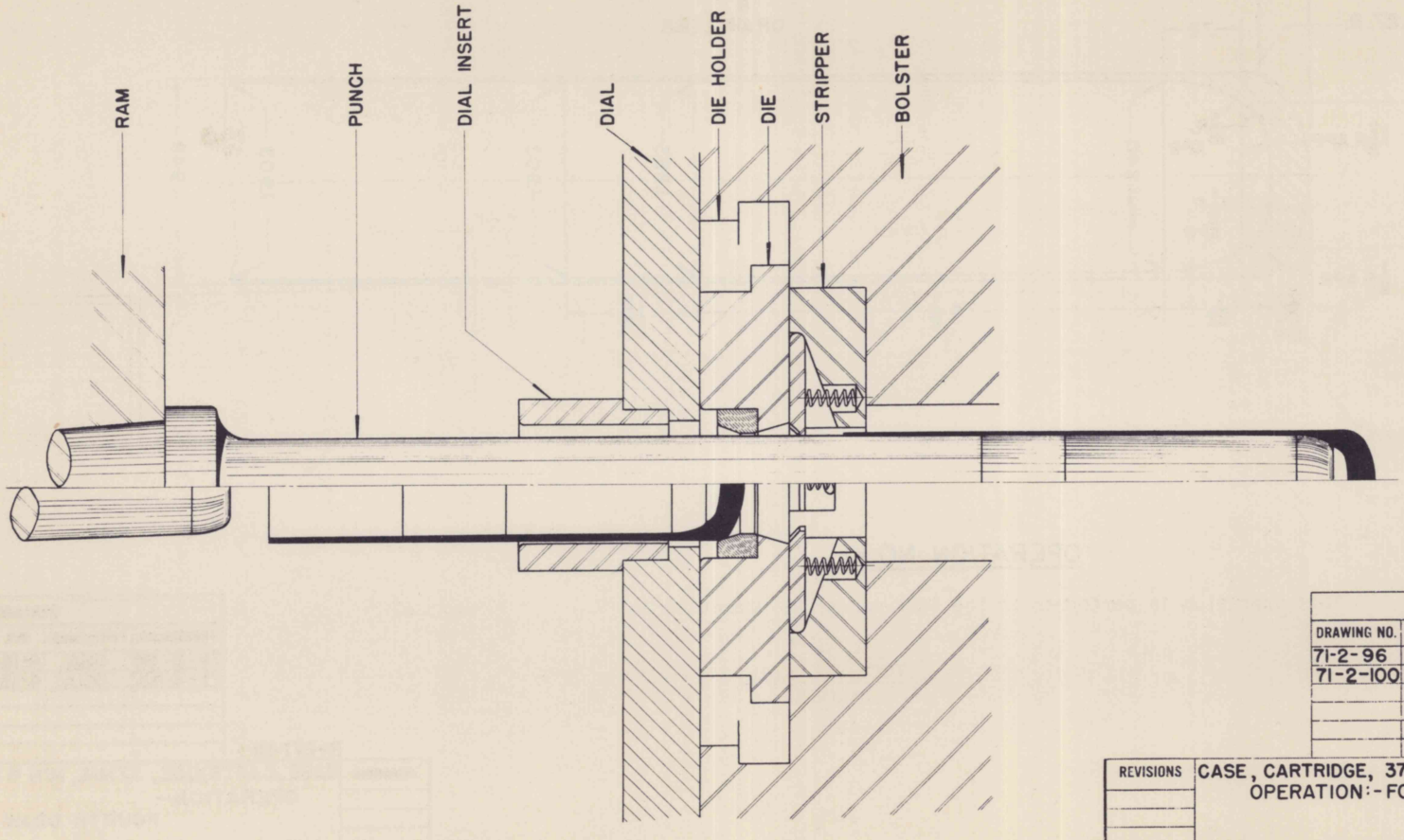

SETUP SKETCH

PERTAINS TO		
DRAWING NO.	PIECE MARK	REV. DATE
71-2-96	96A	4-18-40
71-2-100	100A	4-18-40

REVISIONS

CASE, CARTRIDGE, 37 M.M., M16 & M 17
OPERATION:- FOURTH DRAW

FRANKFORD ARSENAL MAY 1, 1940

SUBMITTED
CAPT. ORD. DEPT., U. S. A.

APPROVED
ORD. DEPT., U. S. A.

DRAFTSMAN	TRACER	WORKSMAN
CHECKER	CHECKER	CH'F DR'SMAN

FB17217

STAMP:-FB 17218

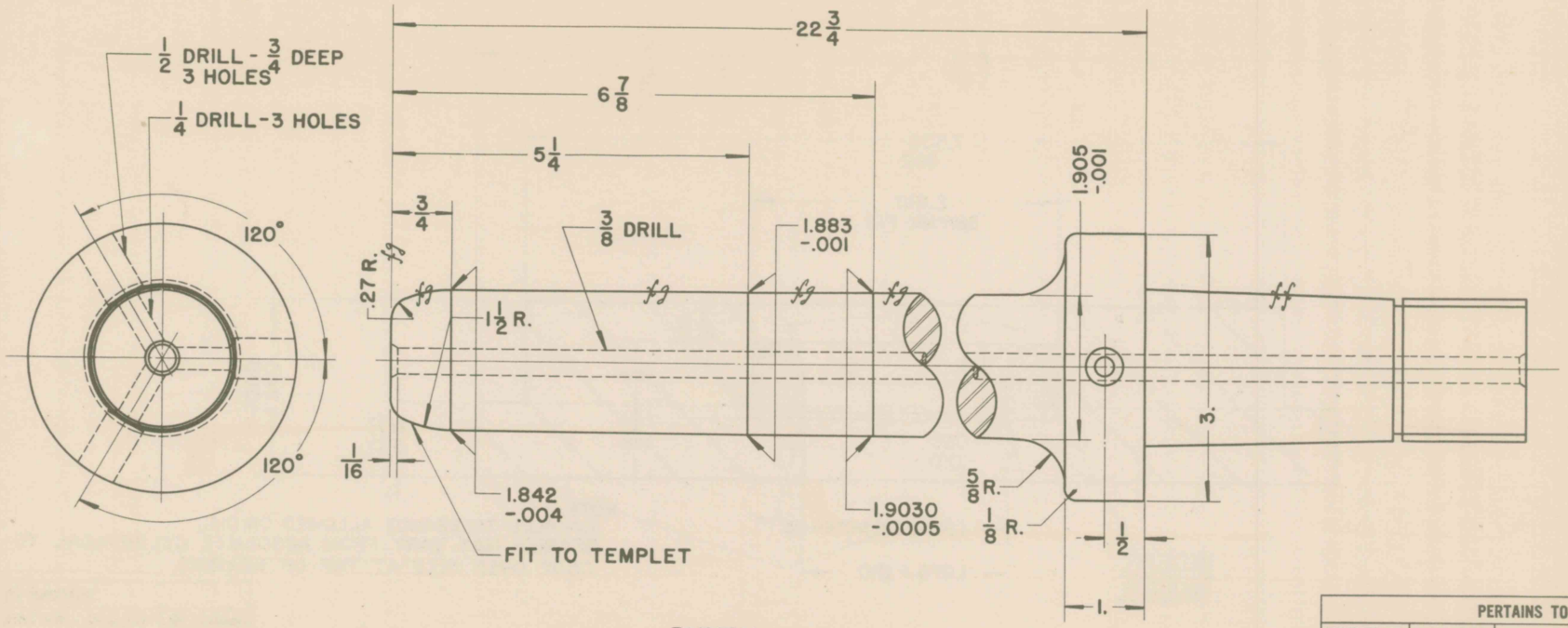

PUNCH
TOOL STEEL
HARDEN

PERTAINS TO		
DRAWING NO.	PIECE MARK	REV. DATE
71-2-96	96A	4-18-40
71-2-100	100A	4-18-40

R-271-13

REVISIONS

CASE, CARTRIDGE, 37 MM., M16 & M17
OPERATION:- FOURTH DRAW

FRANKFORD ARSENAL MAY 1, 1940

SUBMITTED
CAPT. ORD. DEPT., U. S. A.

APPROVED
ORD. DEPT., U. S. A.

DRAFTSMAN	TRACER	DES'GN DRAFTSMAN
CHECKER	CHECKER	CH'F DR'SMAN

FB17218

STAMP:-FB17219

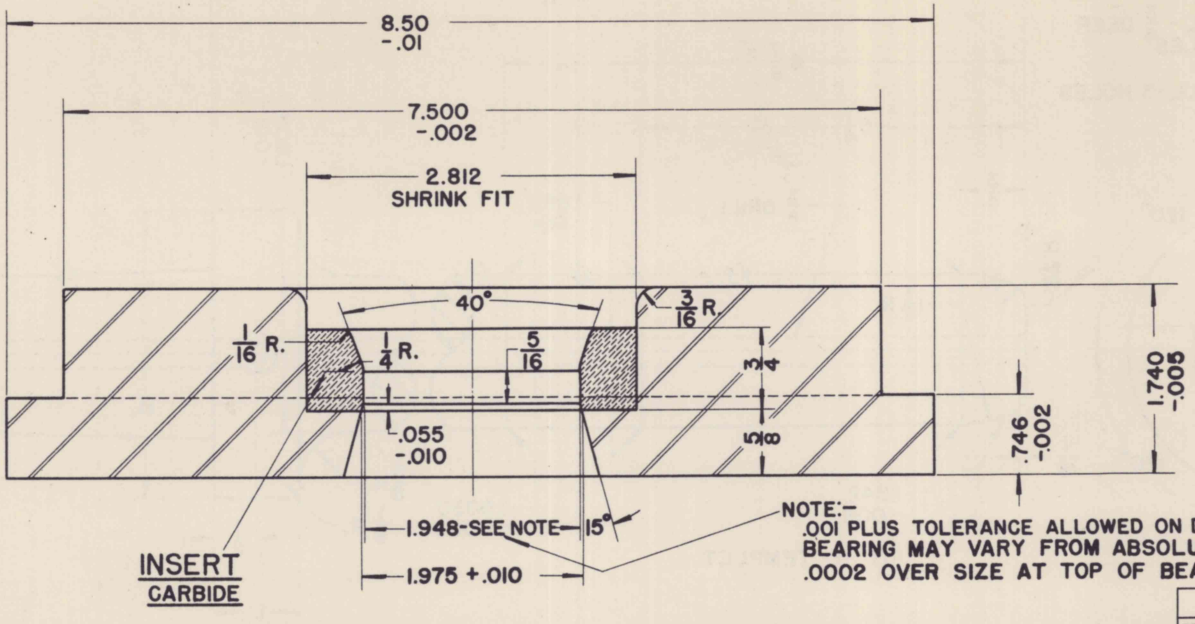

NOTE:-
.001 PLUS TOLERANCE ALLOWED ON DIA., BEARING MAY VARY FROM ABSOLUTE CYLINDRICAL TO .0002 OVER SIZE AT TOP OF BEARING.

DIE
MACH. STEEL

NOTE:
1.948 DIA. & 2.812 DIA. & 7.500 DIA. MUST BE CONCENTRIC WITH EACH OTHER WITHIN .001 TOTAL INDICATED RUN OUT.

PERTAINS TO		
DRAWING NO.	PIECE MARK	REV. DATE
71-2-96	96A	4-18-40
71-2-100	100A	4-18-40

R-271-14A

REVISIONS

CASE, CARTRIDGE, 37 MM., M16 & M17
OPERATION:- FOURTH DRAW

FRANKFORD ARSENAL MAY 1, 1940

SUBMITTED
F.O.C. Alfred
CAPT. ORD. DEPT., U. S. A.

APPROVED
ORD. DEPT., U. S. A.

DRAFTSMAN	TRACER	DIV'L FOREMAN
CHECKER	CHECKER	CH'F DR SMAN

FB17219

STAMP:-FB17220

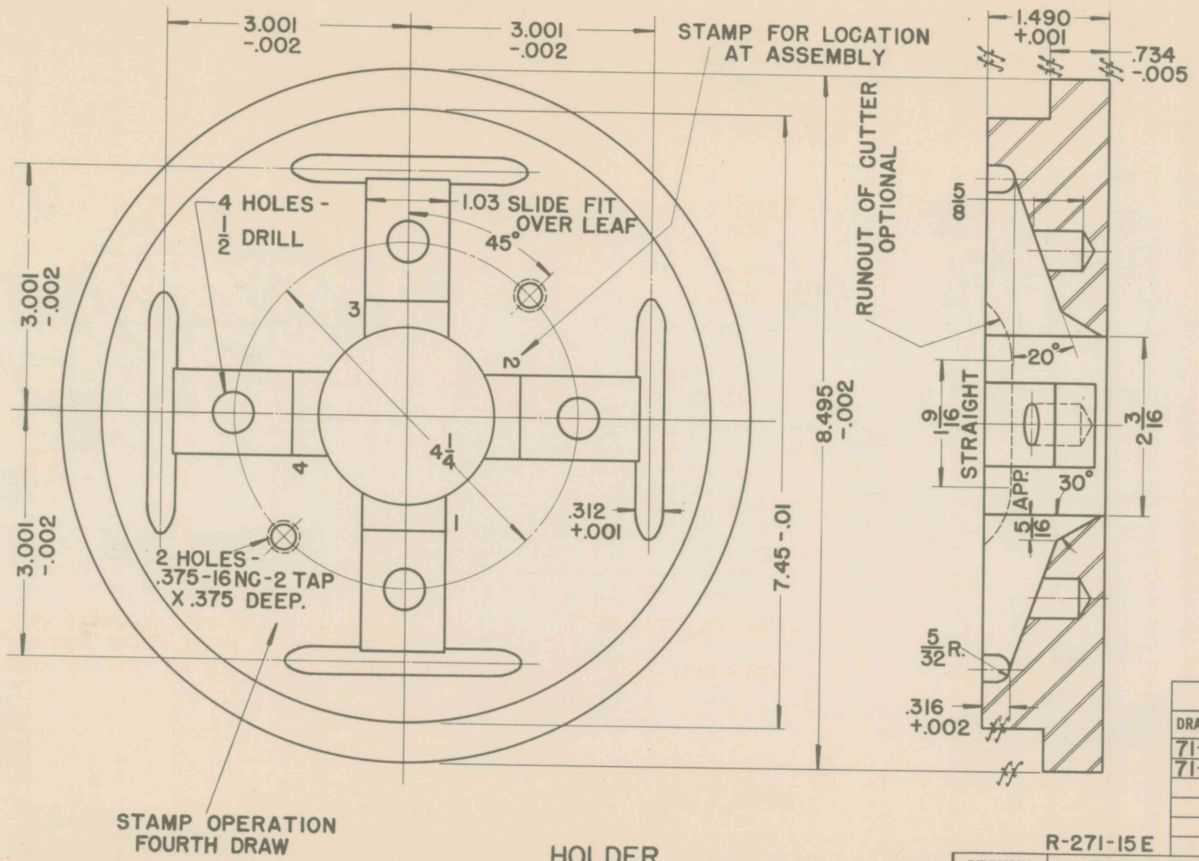

STAMP OPERATION
FOURTH DRAW

HOLDER
MACH. STEEL

R-271-15 E

PERTAINS TO		
DRAWING NO.	PIECE MARK	REV. DATE
71-2-96	96A	4-18-40
71-2-100	100A	4-18-40

REVISIONS

CASE, CARTRIDGE, 37 MM., M16 & M17
STRIPPER DETAILS

FRANKFORD ARSENAL MAY 1, 1940

SUBMITTED
CAPT. ORD. DEPT., U. S. A.

APPROVED
ORD. DEPT., U. S. A.

DRAFTSMAN
TRACER CKS
CHECKER
CHECKER
W'G DR'SMAN
CH'F DR'SMAN

FB17220

STAMP:-FB17221

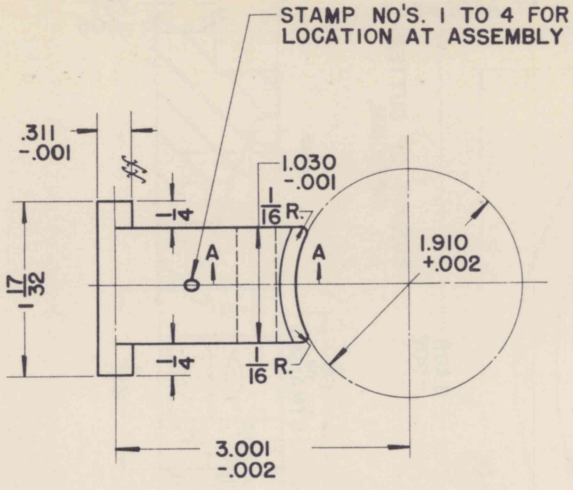

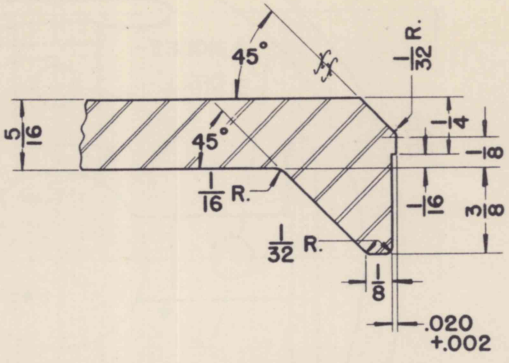

SECTION "A-A"

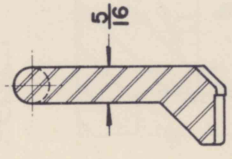

LEAF, STRIPPER (4TH. DRAW)
FOUR-TOOL STEEL
HARDEN

PERTAINS TO		
DRAWING NO.	PIECE MARK	REV. DATE
71-2-96	96A	4-18-40
71-2-100	100A	4-18-40

R-271-15D

REVISIONS

CASE, CARTRIDGE, 37 MM., M16 & M17
STRIPPER DETAILS

FRANKFORD ARSENAL MAY 1, 1940

SUBMITTED F.O.C. Alford CAPT. ORD. DEPT., U. S. A.

APPROVED ORD. DEPT., U. S. A.

DRAFTSMAN	TRACER	L.O.'G DRAFTSMAN
CHECKER	CKS CHECKER	CH'F DR'SMAN

FB17221

MARKING:-
37 M.M. CARTRIDGE CASE, M16 & M17
71-2-96 & 71-2-100-INSIDE DIA. OF DIE-4 TH. DRAW WORK
FB 17222

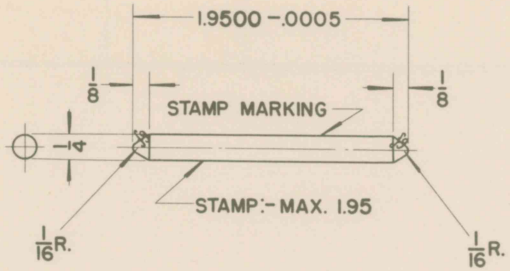

PIN GAGE
TOOL STEEL
HARDEN

PERTAINS TO		
DRAWING NO.	PIECE MARK	REV. DATE
71-2-96	96A	4-18-40
71-2-100	100A	4-18-40

FOR CHECK GAGE SEE DRAWING FB 11175 (5)
A= 1.95 CHECK FOR MAX.

LAP ∫9 SURFACES
REMOVE ALL SHARP EDGES

REVISIONS	CASE, CARTRIDGE, 37 M.M., M16 & M17 GAGE FOR INSIDE DIA. OF 4TH DRAW DIE			
	FRANKFORD ARSENAL MAY 1, 1940			
	SUBMITTED CAPT. ORD. DEPT., U. S. A.	DRAFTSMAN	TRACER	HEAD DRAFTSMAN
	APPROVED ORD. DEPT., U. S. A.	CHECKER	CHECKER	CH'F DR'SMAN
				FB17222

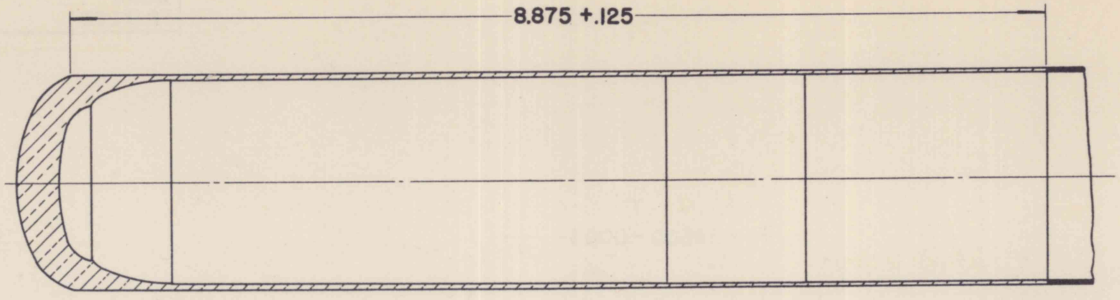

OPERATION NO. 11

This operation is performed the same as the first Trim operation No. 8.

PERTAINS TO		
DRAWING NO.	PIECE MARK	REV. DATE
71-2-96	96A	4-18-40
71-2-100	100A	4-18-40

R-271-1H

REVISIONS	CASE, CARTRIDGE, 37MM., M16 & M17 OPERATION:- SECOND TRIM FRANKFORD ARSENAL MAY 1, 1940			
	SUBMITTED CAPT. ORD. DEPT., U. S. A.	DRAFTSMAN H.J.G.	TRACER H.J.G.	L'D'G DR'SMAN
		CHECKER	CHECKER	CH'F DR'SMAN
	APPROVED ORD. DEPT., U. S. A.	FB17223		

MARKING:-
37 MM. CARTRIDGE CASE, M16 & M17
71-2-96 & 71-2-100 - 2ND TRIM LENGTH
WORK
FB 17224

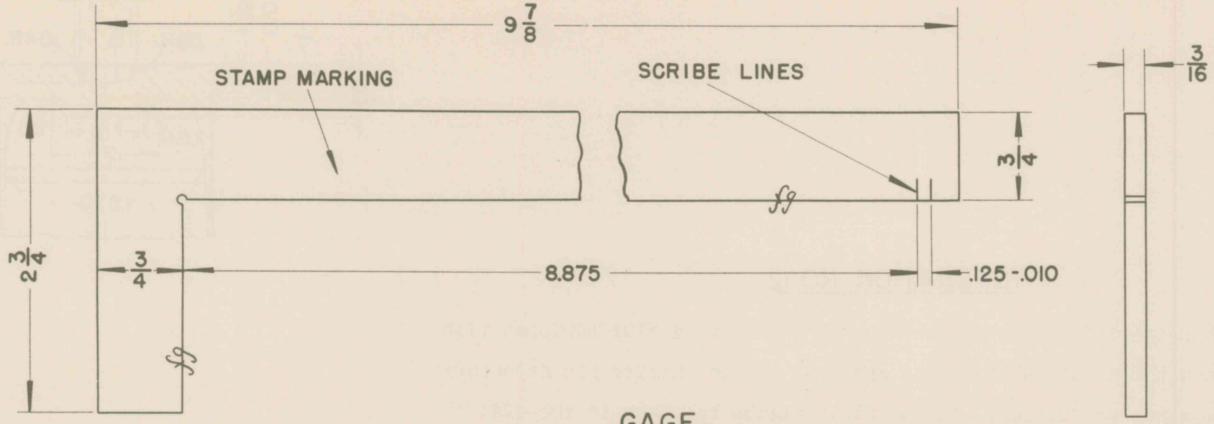

GAGE
MACH. STEEL
HARDEN

PERTAINS TO		
DRAWING NO.	PIECE MARK	REV. DATE
71-2-96	96A	4-18-40
71-2-100	100A	4-18-40

LAP SURFACES
REMOVE ALL SHARP EDGES

REVISIONS	CASE, CARTRIDGE, 37 MM., M16 & M17
	GAGE FOR 2ND TRIM LENGTH
	FRANKFORD ARSENAL MAY 1, 1940
	SUBMITTED F.O.A. CAPT. ORD. DEPT., U. S. A. — DRAFTSMAN CHECKER — TRACER F.O.A. CHECKER — ENGINEERING CH'F DR'SMAN
	APPROVED ORD. DEPT., U. S. A. — FB17224

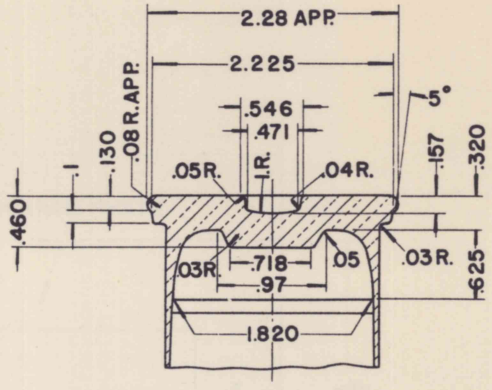

OPERATION NO. 12

For this operation a Ferracute Knuckle Joint Press E401 equipped with dial feed and knock-out is used. One operator and one helper are necessary to insure maximum production. The operator places the Case in the dial to be headed and operates the press. The helper removes the Case after it has been headed and knocked out. Due to the short stroke of the press the knock-out also has a very short stroke and it is necessary for the helper to use a hand pry after the knock-out has extracted the Case part way.

PERTAINS TO		
DRAWING NO.	PIECE MARK	REV. DATE
71-2-96	96A	4-18-40
71-2-100	100A	4-18-40

R-271-1J

REVISIONS

CASE, CARTRIDGE, 37 MM., M16 & M17
OPERATION:-
HEAD AND INDENT

FRANKFORD ARSENAL MAY 1, 1940

SUBMITTED F D C Alford CAPT. ORD. DEPT., U. S. A.

APPROVED ORD. DEPT., U. S. A.

DRAFTSMAN	TRACER	DIV. DRAFTSMAN
H.J.G.	H.J.G.	
CHECKER	CHECKER	CH'F DR'SMAN

FB17225

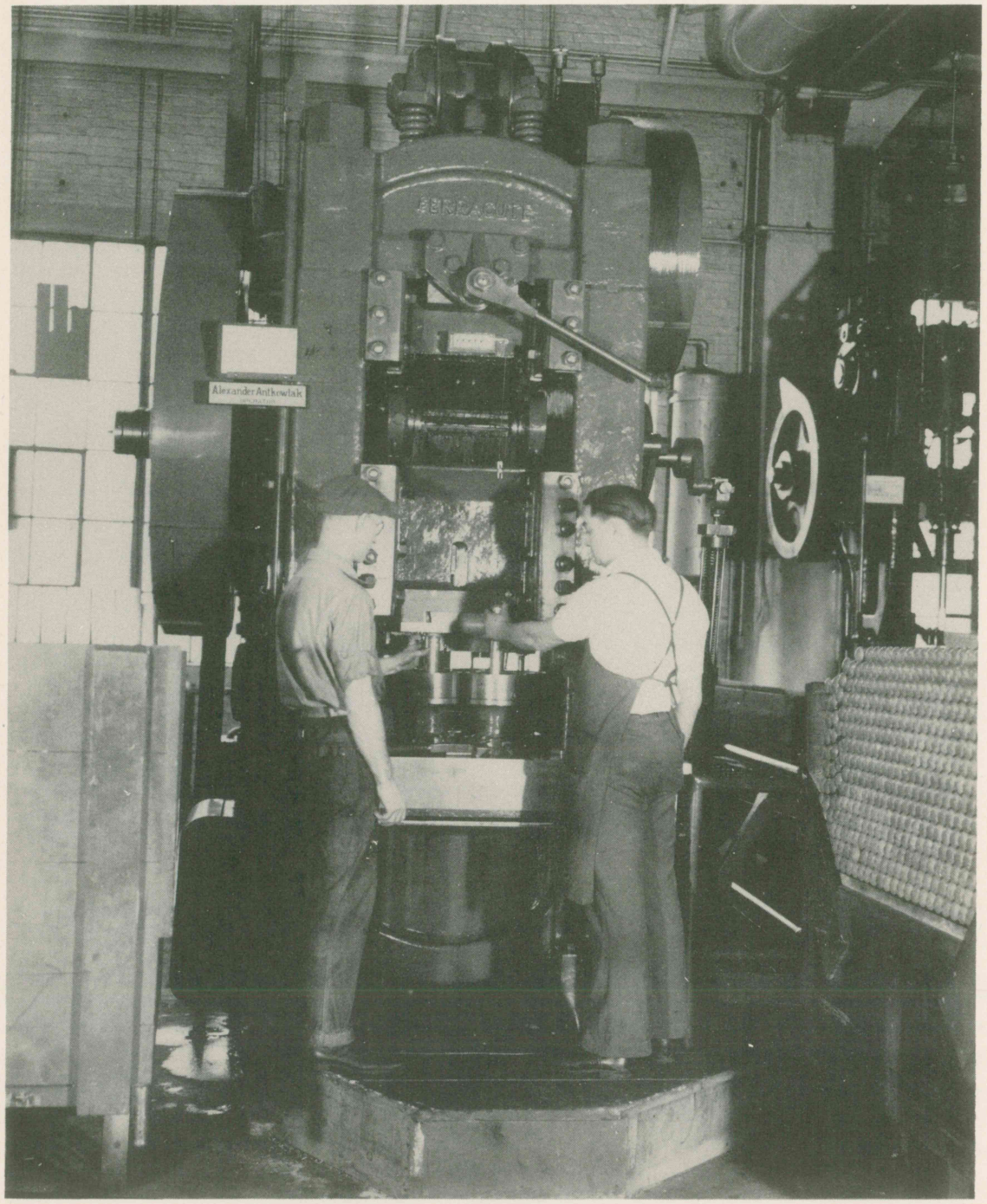

HEADING OPERATION
37MM CARTRIDGE CASE

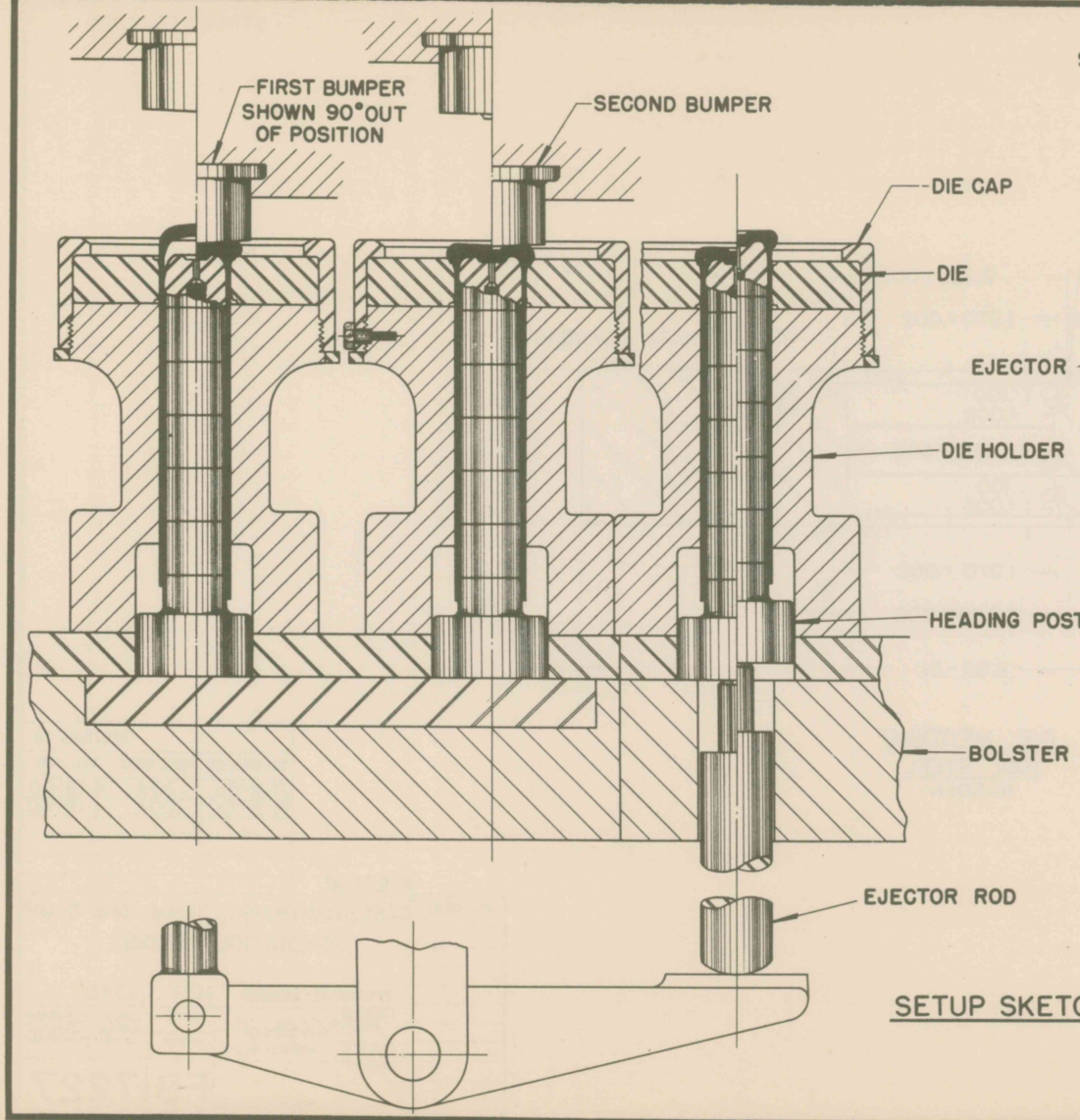

SETUP SKETCH

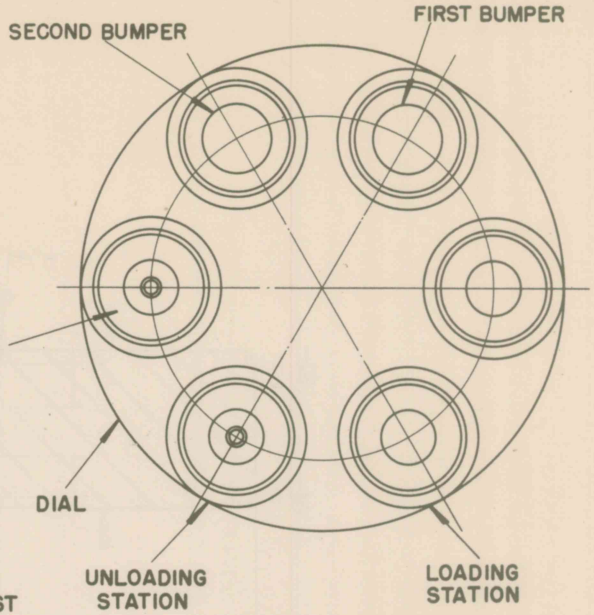

TOP VIEW

PERTAINS TO		
DRAWING NO.	PIECE MARK	REV. DATE
71-2-96	96A	4-18-40
71-2-100	100A	4-18-40

REVISIONS

CASE, CARTRIDGE, 37MM., M16 & M17
OPERATION:- HEADING

FRANKFORD ARSENAL MAY 1, 1940

SUBMITTED F O C Agord CAPT. ORD. DEPT., U. S. A.

APPROVED ORD. DEPT., U. S. A.

DRAFTSMAN O.R.S. CHECKER | TRACER O.R.S. CHECKER | PER DRAFTSMAN O.R.S. CH'F DR'SMAN

FB17226

STAMP:-FB17227

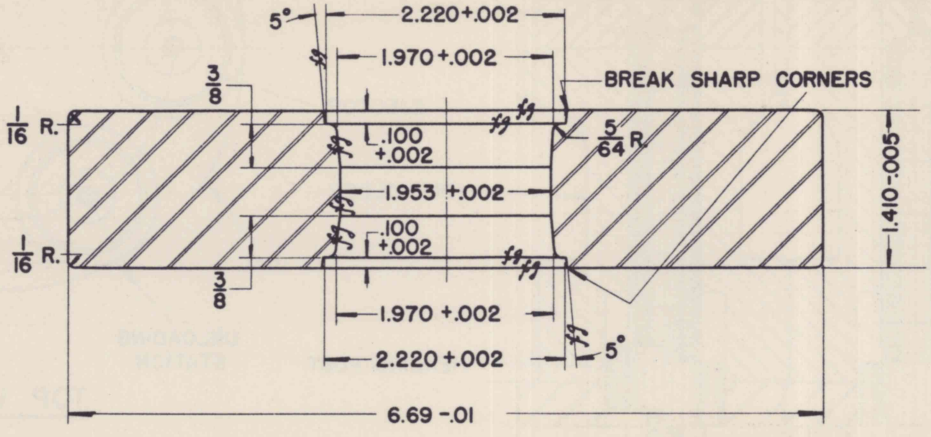

DIE, HEADING
TOOL STEEL
HARDEN

PERTAINS TO		
DRAWING NO.	PIECE MARK	REV. DATE
71-2-96	96A	4-18-40
71-2-100	100A	4-18-40

R-271-18

REVISIONS

CASE, CARTRIDGE, 37MM., M16 & M17
OPERATION:-HEADING

FRANKFORD ARSENAL MAY 1, 1940

SUBMITTED
J. C. Agard
CAPT. ORD. DEPT., U. S. A.

APPROVED
ORD. DEPT., U. S. A.

DRAFTSMAN	TRACER	LOFTSMAN
CHECKER	CHECKER	CHIEF DRAFTSMAN
	GKS	M.K.S.

FB17227

STAMP:-FB17228

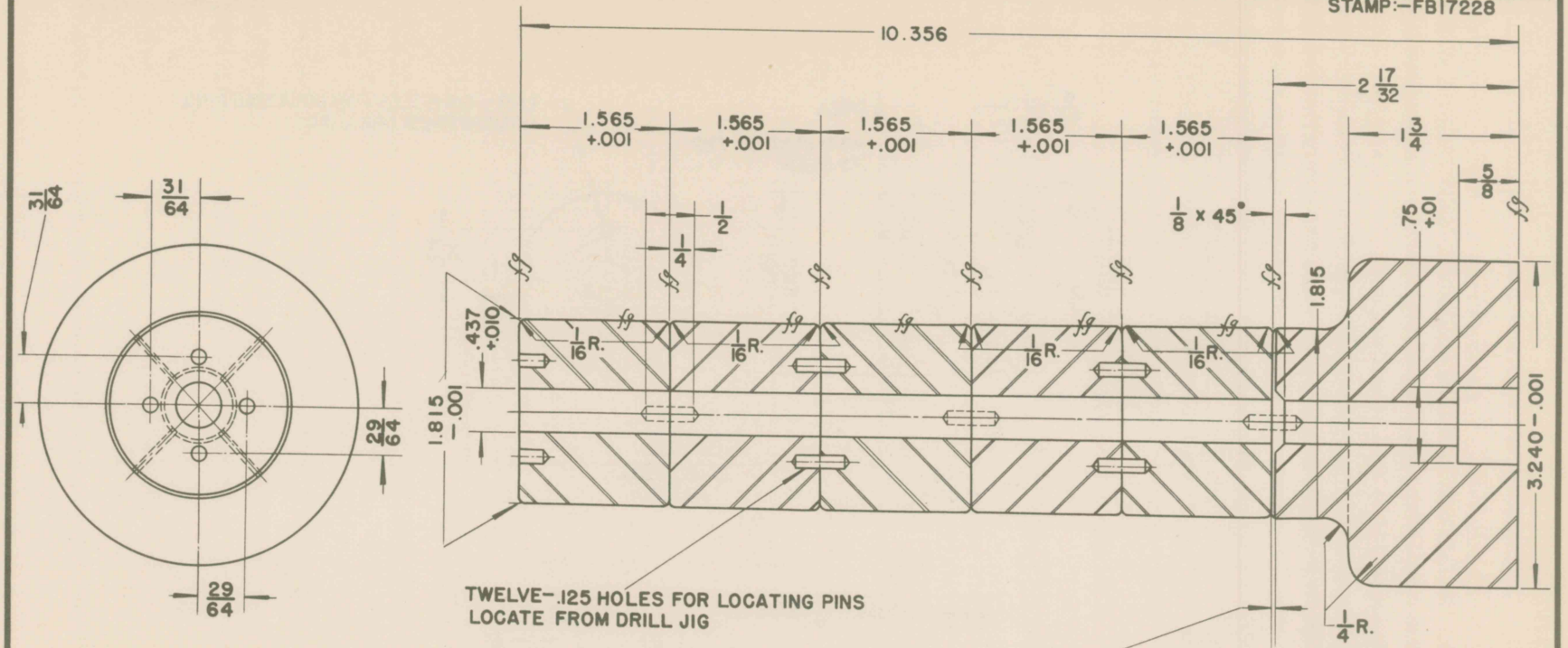

PERTAINS TO		
DRAWING NO.	PIECE MARK	REV. DATE
71-2-96	96A	4-18-40
71-2-100	100A	4-18-40

POST

TOOL STEEL

HARDEN

12-PINS, STEEL, .125 x .437 LONG

R-271-20

REVISIONS

CASE, CARTRIDGE, 37 MM., M16 & M17

OPERATION:-HEADING

FRANKFORD ARSENAL MAY 1, 1940

SUBMITTED Joe Agnew CAPT. ORD. DEPT., U. S. A.

APPROVED ORD. DEPT., U. S. A.

DRAFTSMAN | TRACER F.D.A. | LOFT DRAFTSMAN W.R.V.

CHECKER | CHECKER | CH'F DR'SMAN

FB17228

STAMP:—FB 17229

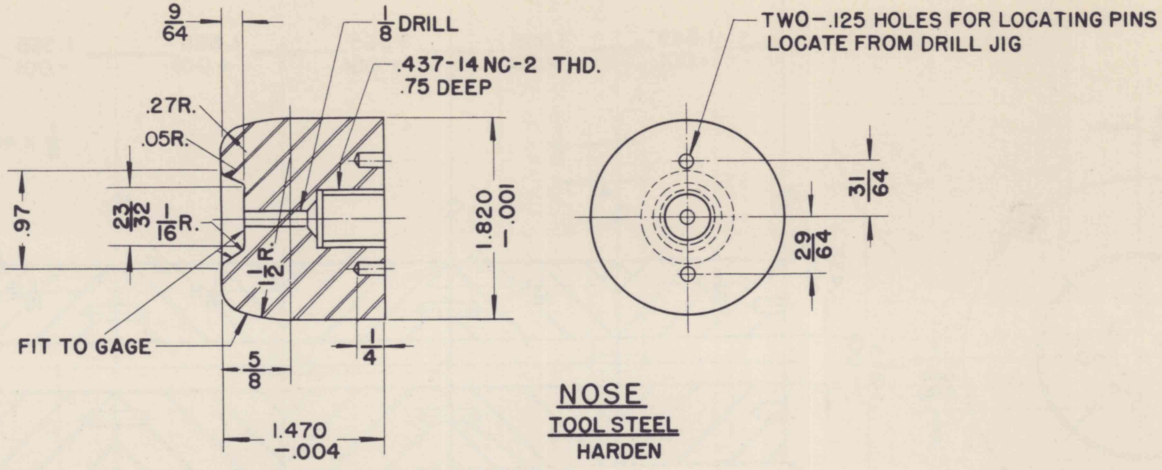

NOSE
TOOL STEEL
HARDEN

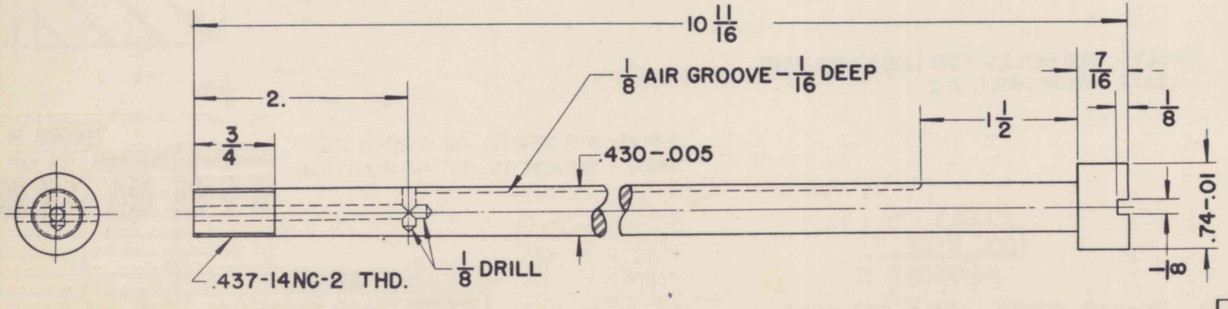

BOLT
MACH. STEEL

PERTAINS TO		
DRAWING NO.	PIECE MARK	REV. DATE
71-2-96	96A	4-18-40
71-2-100	100A	4-18-40

R-271-19

REVISIONS

CASE, CARTRIDGE, 37MM., M16 & M17

OPERATION:—HEADING

FRANKFORD ARSENAL MAY 1, 1940

SUBMITTED
F. D. C. Alford
CAPT. ORD. DEPT., U. S. A.

APPROVED
ORD. DEPT., U. S. A.

DRAFTSMAN	TRACER	LIT. GRDSMAN
	F.D.A.	
CHECKER	CHECKER	CH'F DR'SMAN

FB17229

STAMP:-FB17230

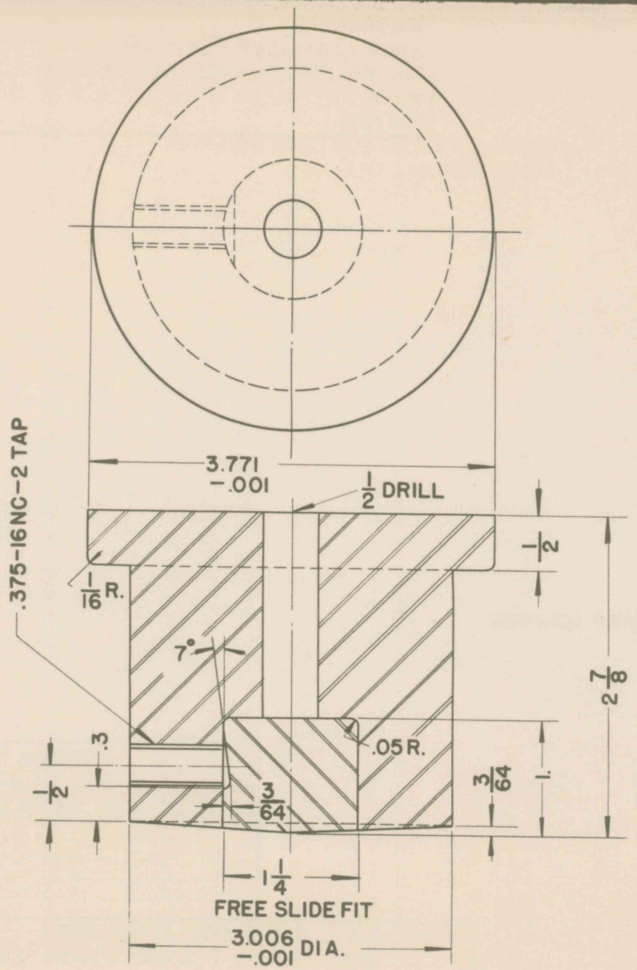

BUMPER-FIRST
TOOL STEEL
HARDEN

1-SCREW, HOLLOW SET, .375-16NC-2-.75 LONG

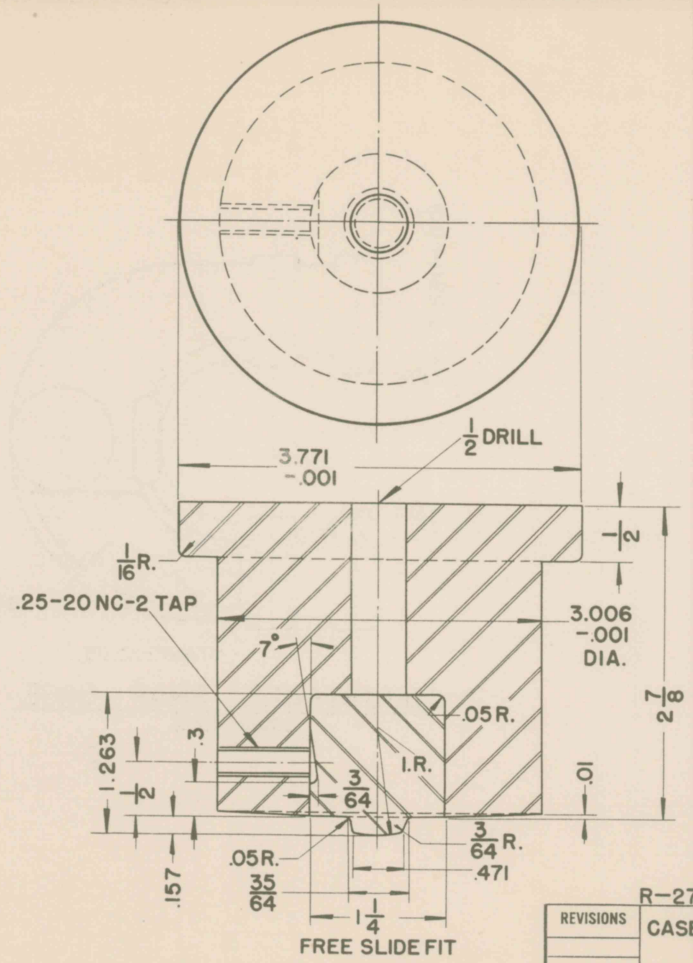

BUMPER-SECOND
TOOL STEEL
HARDEN

1-SCREW, HOLLOW SET, .25-20NC-2-.75 LONG

PERTAINS TO		
DRAWING NO.	PIECE MARK	REV. DATE
71-2-96	96A	4-18-40
71-2-100	100A	4-18-40

R-271-21

REVISIONS

CASE, CARTRIDGE, 37MM., M16 & M17

OPERATION:-HEADING

FRANKFORD ARSENAL MAY 1, 1940

SUBMITTED F. D. C. Alford CAPT. ORD. DEPT., U. S. A.

DRAFTSMAN F.O.A. CHECKER

TRACER CHECKER

L.D.D. DRAFTSMAN CH'T DR'SMAN

APPROVED ORD. DEPT., U. S. A.

FB17230

MARKING :-
37MM. CARTRIDGE CASE M16
71-2-96- DIA. FLANGE ROUGH HEAD
WORK
FB17231

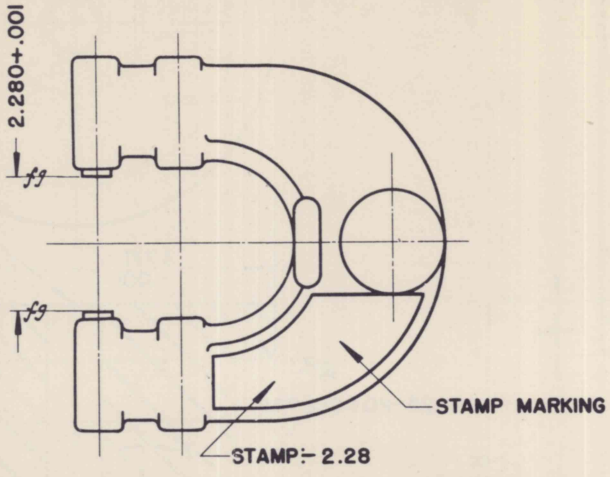

ADJUSTABLE SNAP GAGE
COMMERCIAL

PERTAINS TO		
DRAWING NO.	PIECE MARK	REV. DATE
71-2-96	96A	4-18-40

REVISIONS	CASE, CARTRIDGE, 37 MM., M16 GAGE FOR DIA. FLANGE ROUGH HEAD FRANKFORD ARSENAL MAY 1, 1940			
	SUBMITTED For Alford CAPT. ORD. DEPT., U. S. A.	DRAFTSMAN H.J.G. CHECKER	TRACER H.J.G. CHECKER	LEAD DRAFTSMAN CH'F DR'SMAN
	APPROVED ORD. DEPT., U. S. A.	FB17231		

MARKING:-
37MM. CARTRIDGE CASE M16 & M17
71-2-96 & 71-2-100 ROUGH THICKNESS HD.
WORK
FB17232

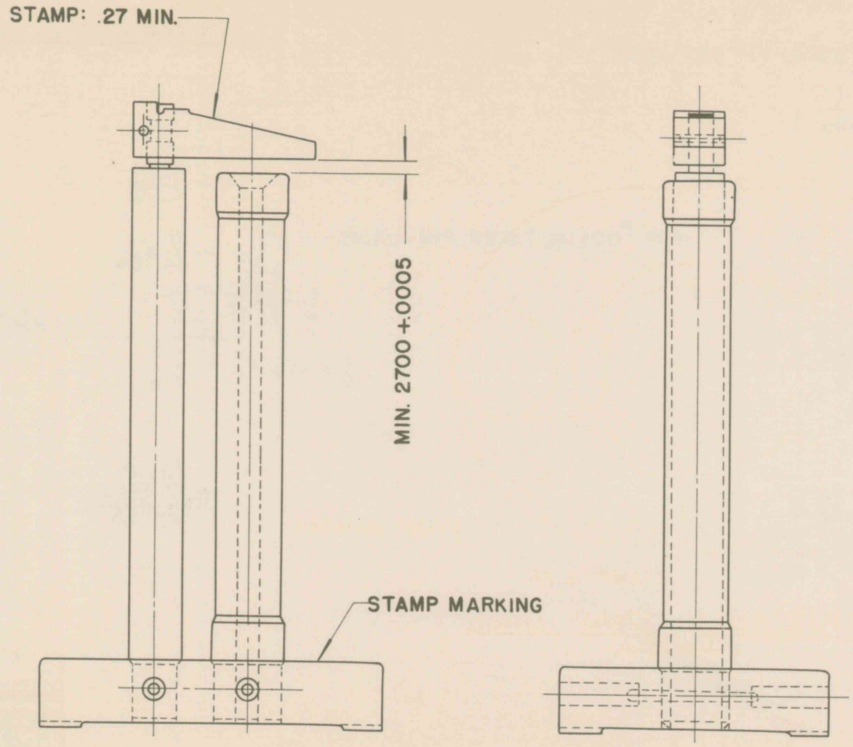

NOTE:-
SWIVEL PIN TO BE FLUSH WITH
TOP OF ARM FOR MIN. POS.

PERTAINS TO		
DRAWING NO.	PIECE MARK	REV. DATE
71-2-96	96A	4-18-40
71-2-100	100A	4-18-40

FLUSH PIN GAGE

REVISIONS	CASE, CARTRIDGE, 37 MM., M16 & M17 GAGE FOR ROUGH THICKNESS HEAD ASSEMBLY			
	FRANKFORD ARSENAL	MAY 1, 1940		
	SUBMITTED CAPT. ORD. DEPT., U. S. A.	DRAFTSMAN H.J.G. CHECKER	TRACER H.J.G. CHECKER	LINEOFMAN CH. OF SECT.
	APPROVED ORD. DEPT., U. S. A.	FB17232		

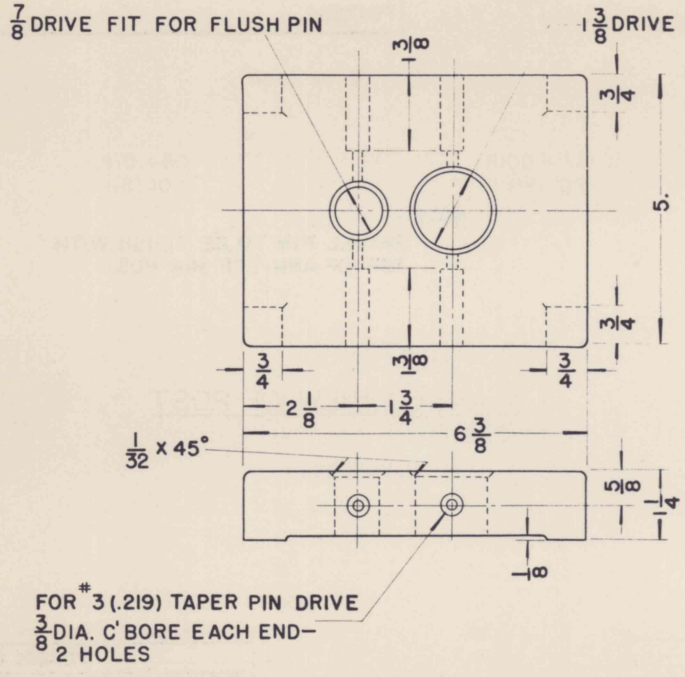

BASE
MACH. STEEL

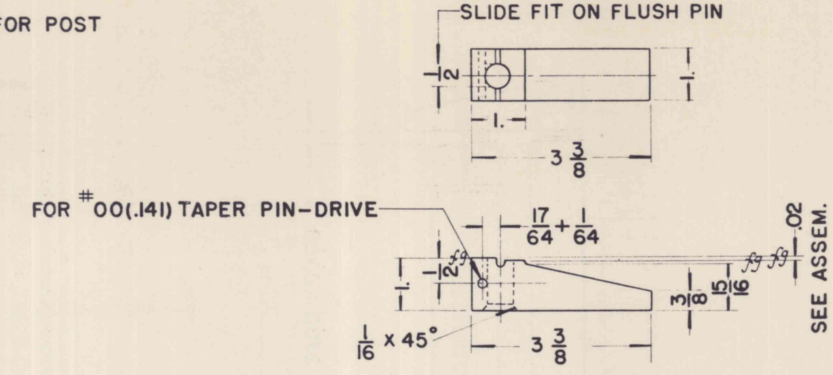

ARM
TOOL STEEL
HARDEN

PERTAINS TO		
DRAWING NO.	PIECE MARK	REV. DATE
71-2-96	96A	4-18-40
71-2-100	100A	4-18-40

LAP fg SURFACES
REMOVE ALL SHARP EDGES

REVISIONS

CASE, CARTRIDGE, 37 MM., M16 & M17
GAGE FOR ROUGH THICKNESS HEAD
DETAILS

FRANKFORD ARSENAL MAY 1, 1940

SUBMITTED: F. C. Alford CAPT. ORD. DEPT. U. S. A.
APPROVED
DRAFTSMAN H.J.G. CHECKER
TRACER H.J.G. CHECKER
DESIGNED UNKN. CHF. DR. MAN.
ORD. DEPT. U. S. A.

FB17233

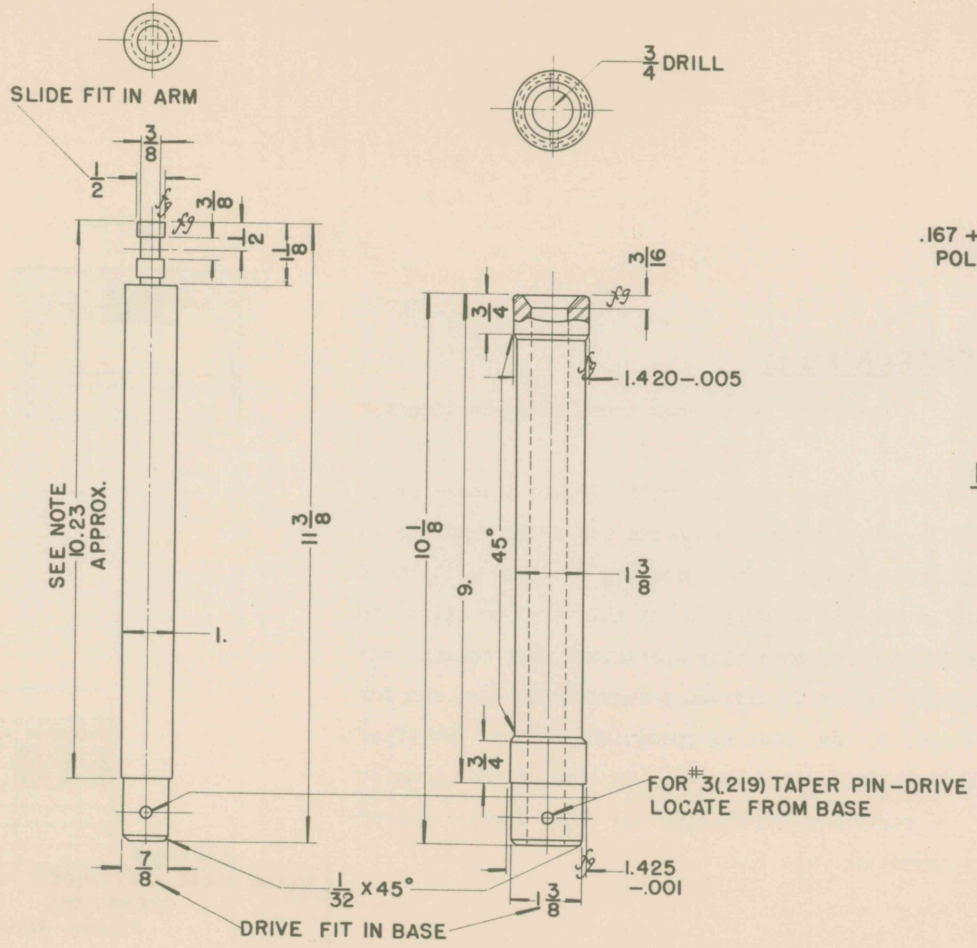

FLUSH PIN
TOOL STEEL
HARDEN

POST
TOOL STEEL
HARDEN

2-PINS, TAPER, STEEL #3 (.219) X 2.5 LONG

LAP fg SURFACES
REMOVE ALL SHARP EDGES

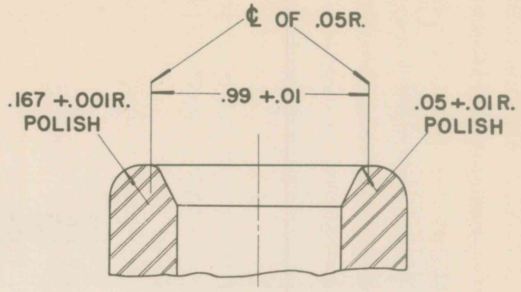

ENLARGED VIEW OF POST

PERTAINS TO		
DRAWING NO.	PIECE MARK	REV. DATE
71-2-96	96A	4-18-40
71-2-100	100A	4-18-40

REVISIONS

CASE, CARTRIDGE, 37MM., M16 & M17
GAGE FOR ROUGH THICKNESS HEAD
DETAILS

FRANKFORD ARSENAL MAY 1, 1940

SUBMITTED
CAPT. ORD. DEPT., U. S. A.
APPROVED
ORD. DEPT., U. S. A.

DRAFTSMAN	TRACER	DRAWSMAN
H.J.G.	H.J.G.	
CHECKER	CHECKER	CHF DR SMAN

FB17234

OPERATION NO. 13

At Frankford Arsenal this operation is performed on a punch press using an indexing fixture as shown on Drg. FB 17236

At the beginning of the contract a drill press equipped with double spindle drill head and double indexing fixture to drill two cases at a time was used. This method is a satisfactory one except production is not so great as the piercing but itis still used in emergencies. The rough primer hole is pierced or drilled at this time to allow the air to escape from the Case during the washing and annealing operations that follow. The Cases are suspended from the base in racks so as to partially anneal the open end for tapering, therefore, the same rack is used in the washing operations before and after annealing. The washing tanks and liquid annealing furnace are in line so that a hoist suspended from a monorail can be used in conveying and placing the racks where required at each succeeding operation, see shop layout on Page 13.

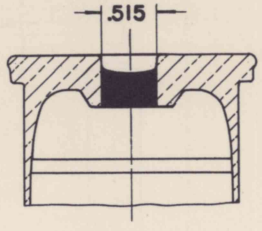

PERTAINS TO		
DRAWING NO.	PIECE MARK	REV. DATE
71-2-96	96A	4-18-40
71-2-100	100A	4-18-40

R-271-IK

REVISIONS

CASE, CARTRIDGE, 37MM., M16 & M17

OPERATION:-

PIERCE PRIMER HOLE

FRANKFORD ARSENAL MAY 1, 1940

SUBMITTED F D C Alfond CAPT. ORD. DEPT., U. S. A.

APPROVED ORD. DEPT., U. S. A.

DRAFTSMAN M.J.G. CHECKER | TRACER M.J.G. CHECKER | LINE OF FIRE J.K.S. CH'F DR'SMAN

FB17235

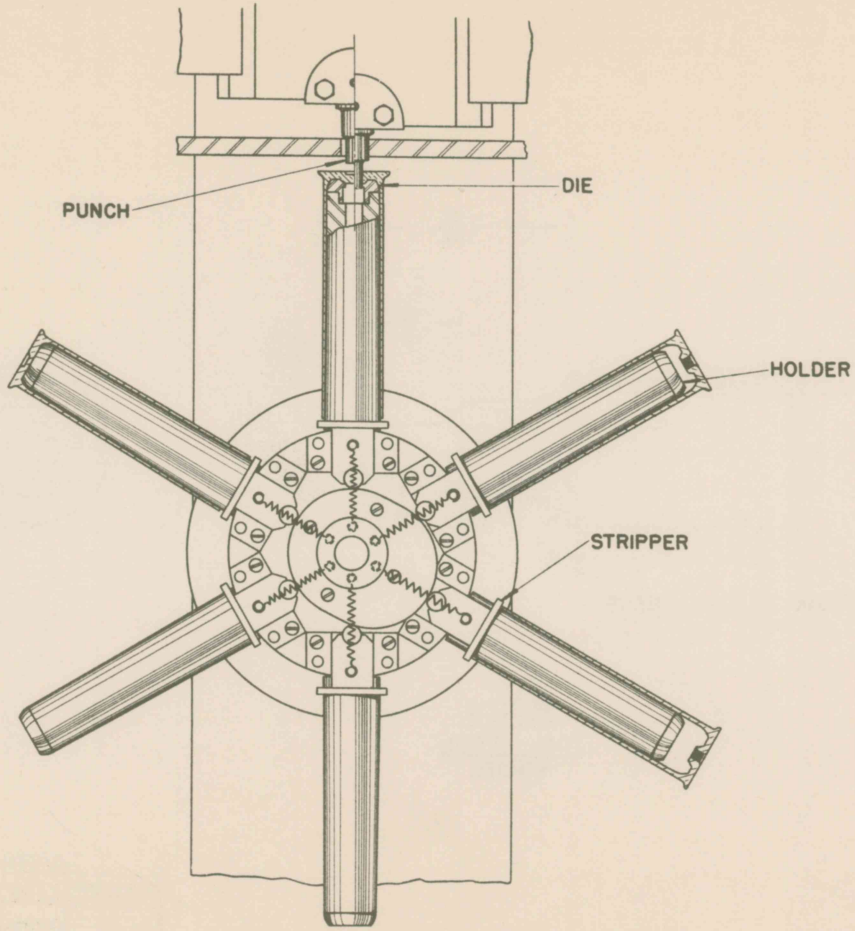

SETUP SKETCH

PERTAINS TO		
DRAWING NO.	PIECE MARK	REV. DATE
71-2-96	96A	4-18-40
71-2-100	100A	4-18-40

REVISIONS

CASE, CARTRIDGE, 37 M.M., M16 & M17
OPERATION:- PIERCE PRIMER HOLE

FRANKFORD ARSENAL MAY 1, 1940

SUBMITTED
CAPT. ORD. DEPT., U. S. A.

APPROVED
ORD. DEPT., U. S. A.

DRAFTSMAN	TRACER	LOAD DRAFTSMAN
C.D.	RJ	W.H.D.
CHECKER	CHECKER	CH'F DR'SMAN

FB17236

STAMP:-FB17237

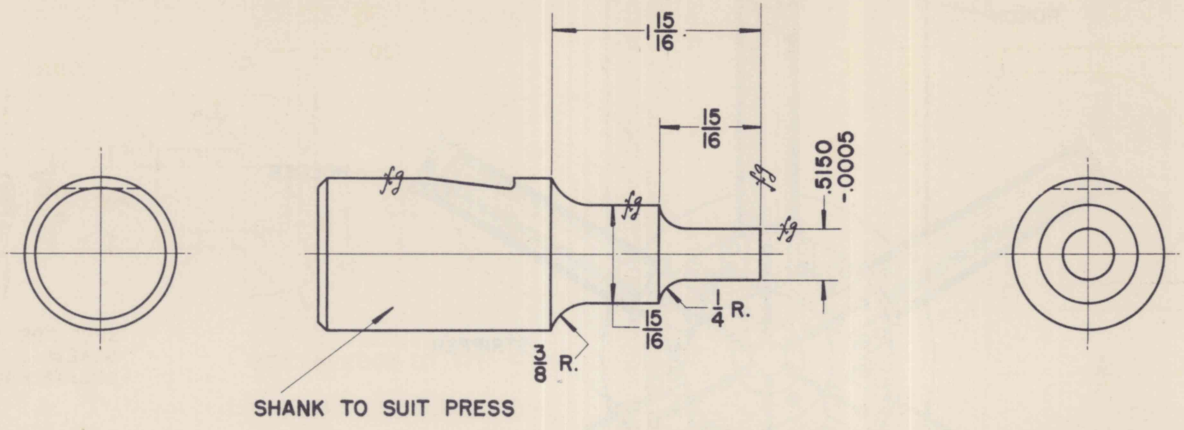

PUNCH
TOOL STEEL
HARDEN

PERTAINS TO		
DRAWING NO.	PIECE MARK	REV. DATE
71-2-96	96A	4-18-40
71-2-100	100A	4-18-40

R-271-23A

REVISIONS

CASE, CARTRIDGE, 37 MM., M16 & M17
OPERATION:-PIERCE PRIMER HOLE

FRANKFORD ARSENAL MAY 1, 1940

SUBMITTED
J O C Allard
CAPT. ORD. DEPT., U. S. A.

APPROVED
ORD. DEPT., U. S. A.

DRAFTSMAN	TRACER	LEAD DR'SMAN
CHECKER	CHECKER	CH'F DR'SMAN
	CKS	W.K.S.

FB17237

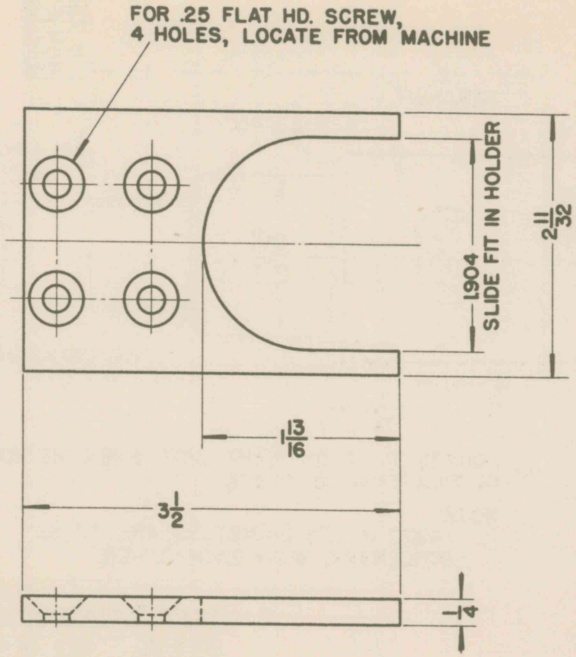

PLATE, STRIPPER
TOOL STEEL

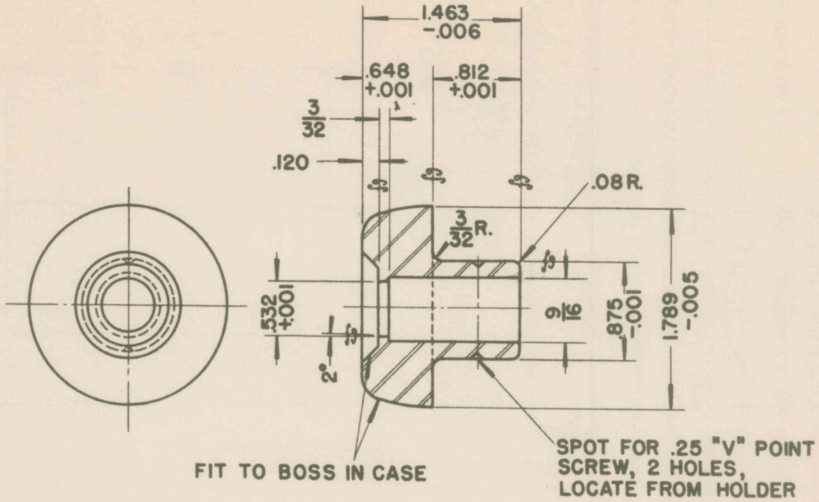

DIE
TOOL STEEL
HARDEN

PERTAINS TO		
DRAWING NO.	PIECE MARK	REV. DATE
71-2-96	96A	4-18-40
71-2-100	100A	4-18-40

R-271-23C

REVISIONS

CASE, CARTRIDGE, 37 M.M., M16 & M17
OPERATION:-PIERCE PRIMER HOLE

FRANKFORD ARSENAL MAY 1, 1940

SUBMITTED
F. O. C. Alford
CAPT. ORD. DEPT., U. S. A.

APPROVED
ORD. DEPT., U. S. A.

DRAFTSMAN	TRACER	LOAD DETAILMAN
	RO	
CHECKER	CHECKER	CH'F DR'SMAN

FB17238

STAMP:-FB 17239

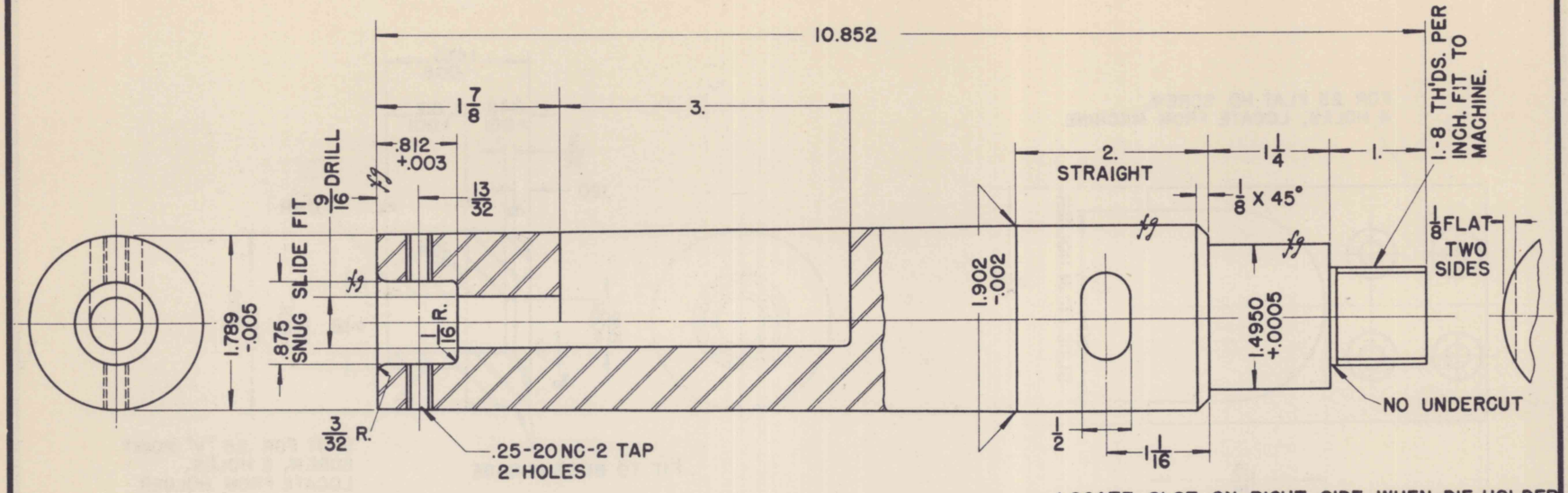

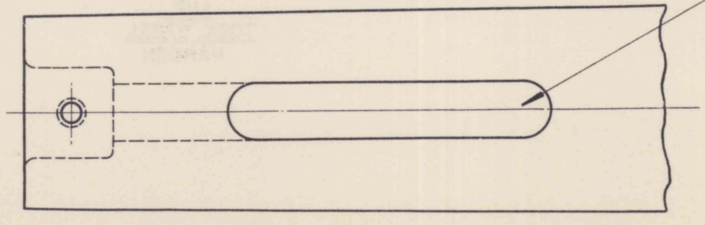

LOCATE SLOT ON RIGHT SIDE WHEN DIE HOLDER IS TIGHTENED IN PLACE.

NOTE:-
1.4950 & .875 DIAMETERS ARE TO BE CONCENTRIC WITH EACH OTHER.

PERTAINS TO		
DRAWING NO.	PIECE MARK	REV. DATE
71-2-96	96A	4-18-40
71-2-100	100A	4-18-40

R-271-23B

HOLDER, DIE
TOOL STEEL
HARDEN
2-SCREWS, HOLLOW SET, "V" POINT, .25-20 NC-2 X .375 LONG

REVISIONS

CASE, CARTRIDGE, 37 MM., M16 & M17
OPERATION:- PIERCE PRIMER HOLE

FRANKFORD ARSENAL MAY 1, 1940

SUBMITTED
CAPT. ORD. DEPT., U. S. A.
APPROVED
ORD. DEPT., U. S. A.

DRAFTSMAN | TRACER CKS | LDG DR'SMAN
CHECKER | CHECKER | CH'F DR'SMAN

FB17239

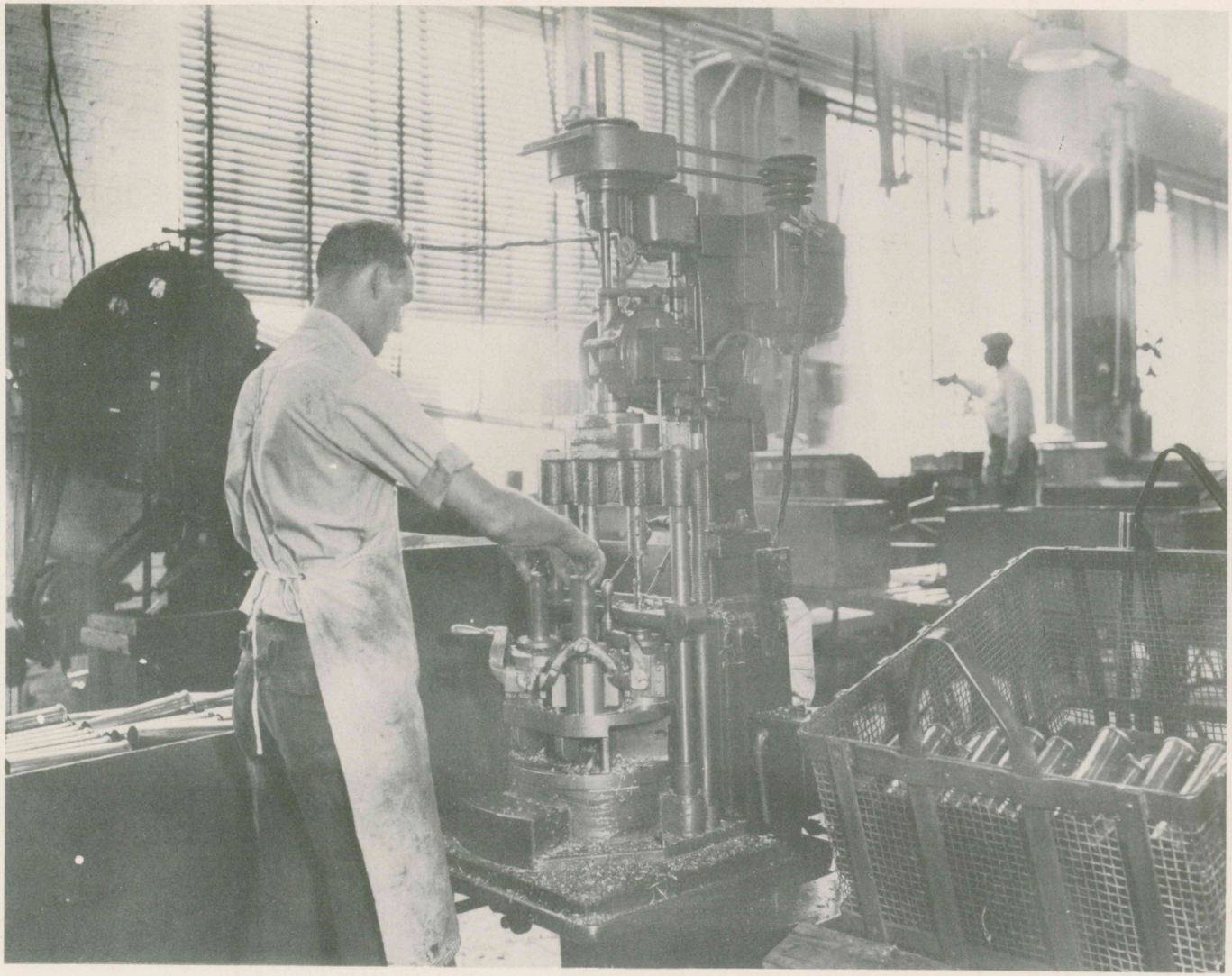

37 MM. CARTRIDGE CASE
ROUGH DRILLING PRIMER HOLE

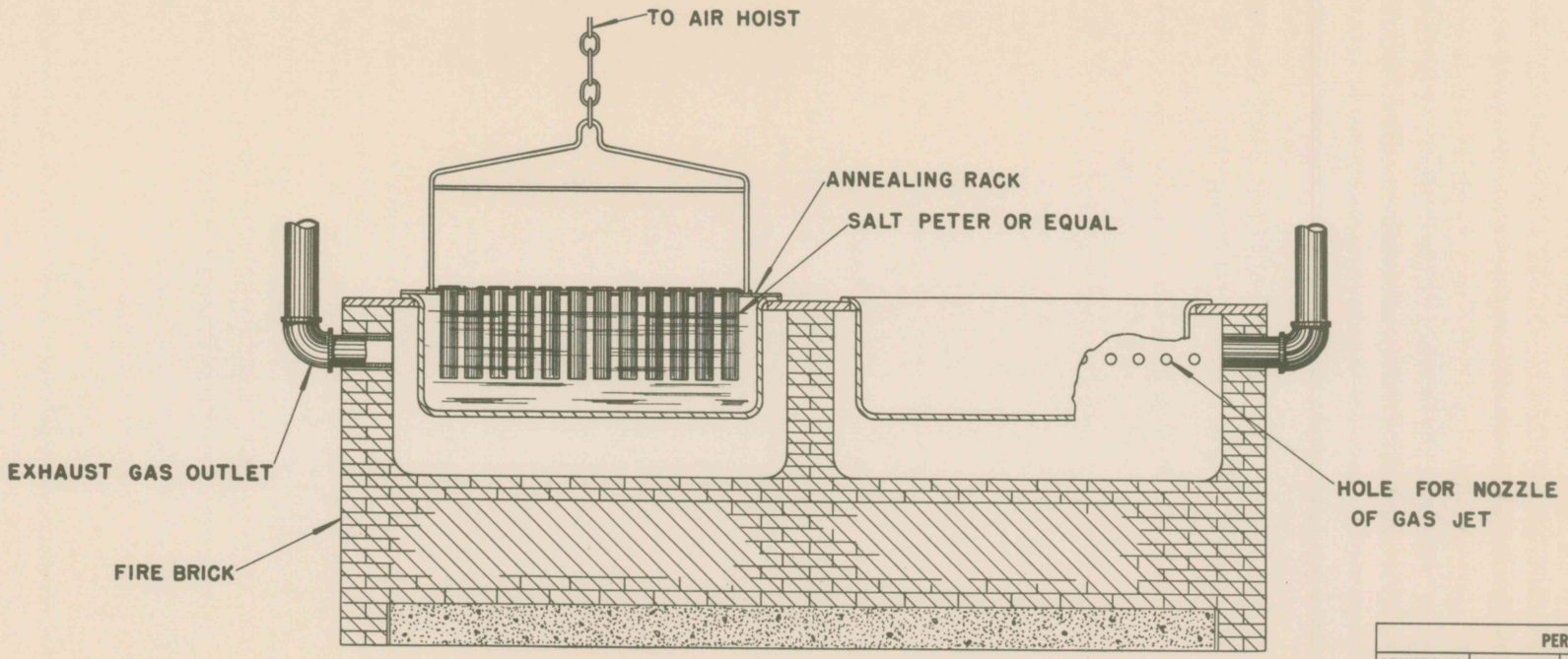

SKETCH OF FURNACE

PERTAINS TO		
DRAWING NO.	PIECE MARK	REV. DATE
71-2-96	96A	4-18-40
71-2-100	100A	4-18-40

REVISIONS

CASE, CARTRIDGE, 37MM., M16 & M17
OPERATIONS:- ANNEAL FOR TAPER
& FINAL MOUTH

FRANKFORD ARSENAL MAY 1, 1940

SUBMITTED
CAPT. ORD. DEPT., U. S. A.

APPROVED
ORD. DEPT., U. S. A.

DRAFTSMAN	TRACER	LOFT-DRAFTSMAN
H.J.G.	H.J.G.	
CHECKER	CHECKER	CH'F DR'SMAN

FB17240

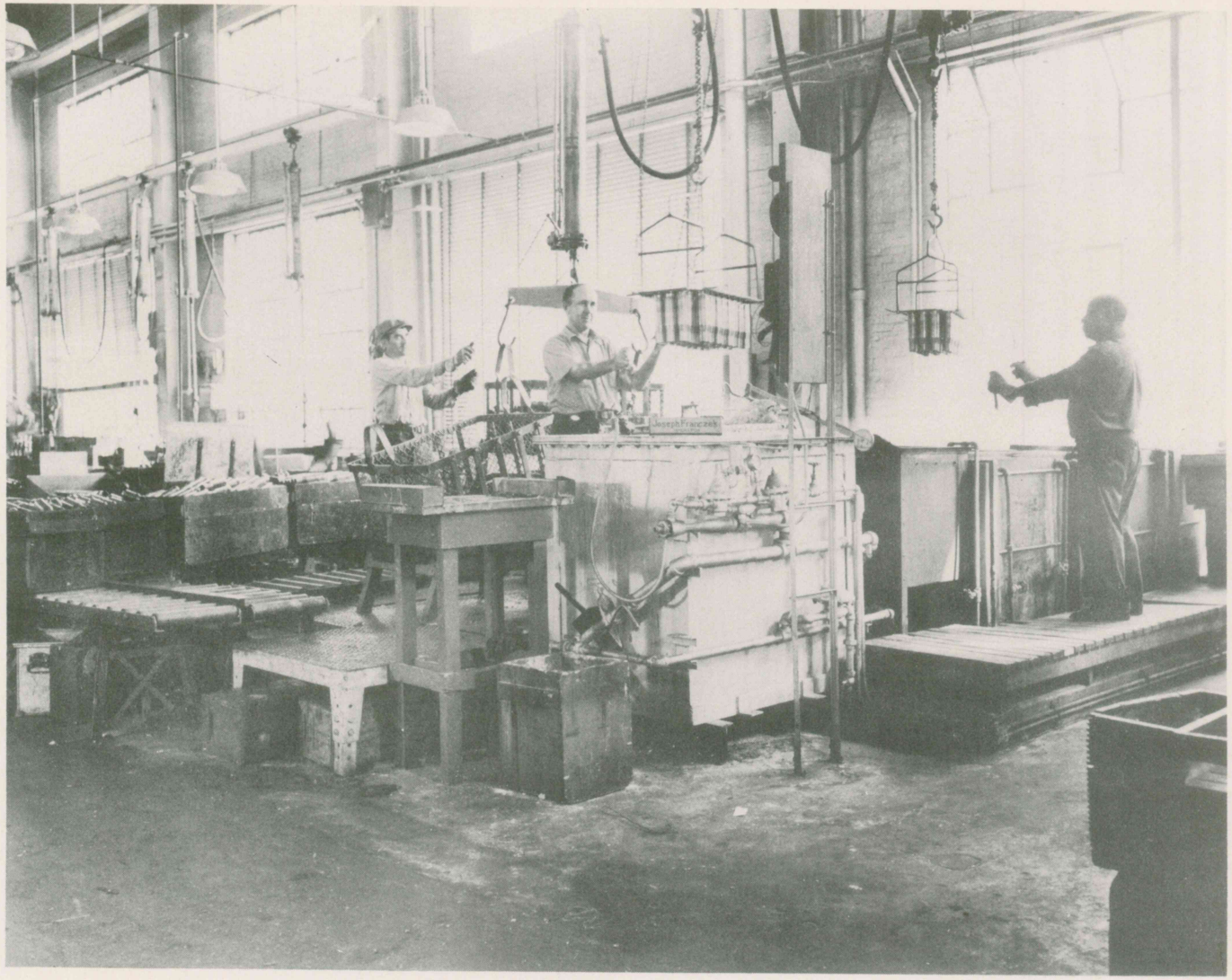

37 MM. CARTRIDGE CASE
TAPER ANNEAL AND WASH

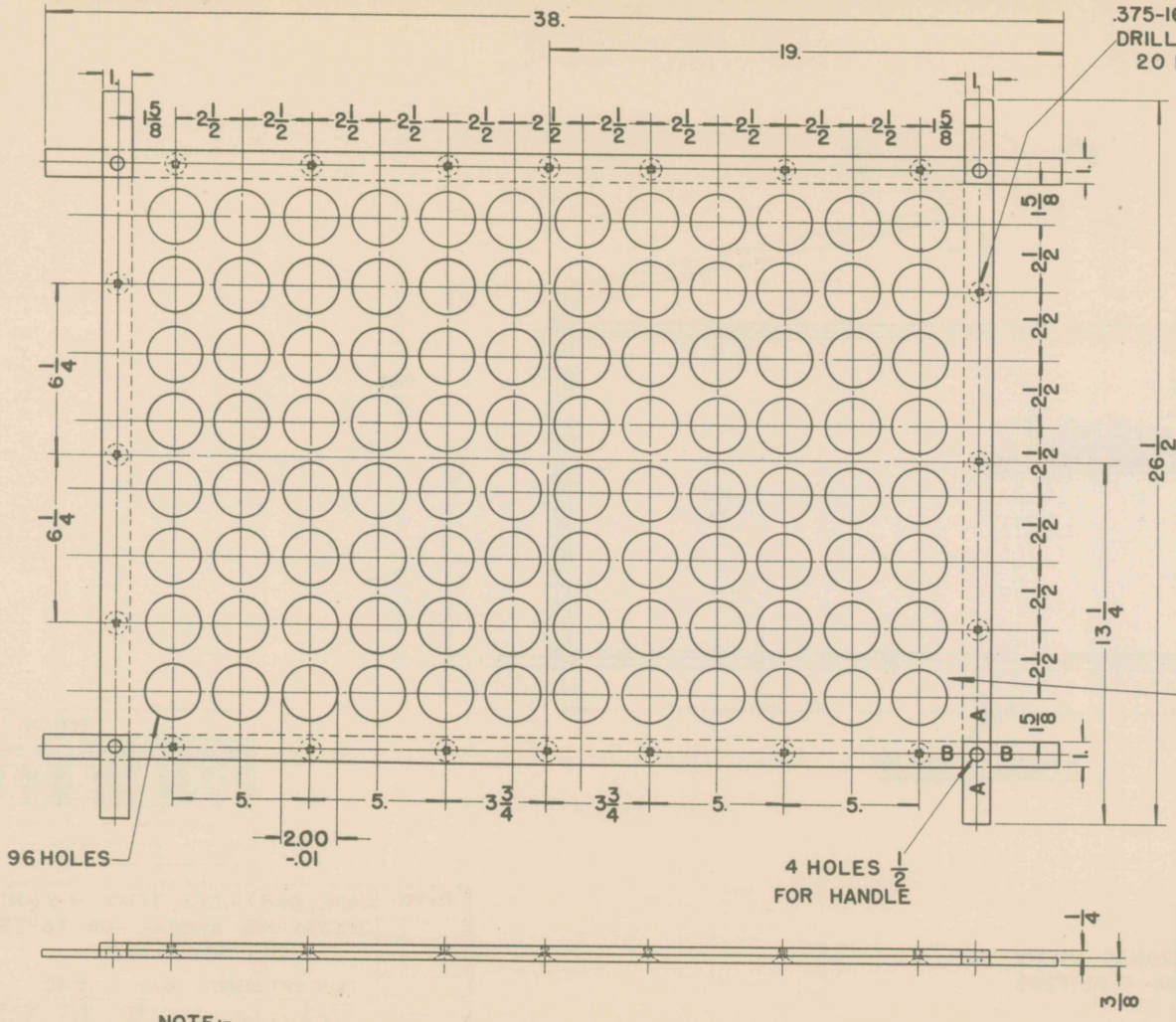

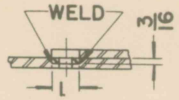

SECTION-AA

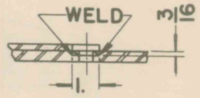

SECTION-BB

RACK

STEEL-S.A.E. 1050

20-SCREWS, FLAT HEAD,
.375-16NC-2 x .625 LONG

PLATE
SHEET STEEL

PERTAINS TO		
DRAWING NO.	PIECE MARK	REV. DATE
71-2-96	96A	4-18-40
71-2-100	100A	4-18-40

NOTE:-
RACK SHOWN WITHOUT HANDLE
FOR ADDITIONAL VIEWS SEE DRGS. FB17242 & FB17243

REVISIONS

CASE, CARTRIDGE, 37 MM., M16 & M17
OPERATIONS:- ANNEAL FOR TAPER
& FINAL MOUTH

FRANKFORD ARSENAL MAY 1, 1940

SUBMITTED
CAPT. ORD. DEPT., U. S. A.

APPROVED
ORD. DEPT., U. S. A.

DRAFTSMAN | TRACER H.J.G. | LAY'G DRFSMAN
CHECKER | CHECKER | CH'F DR'SMAN

FB17241

STAMP: FB17242

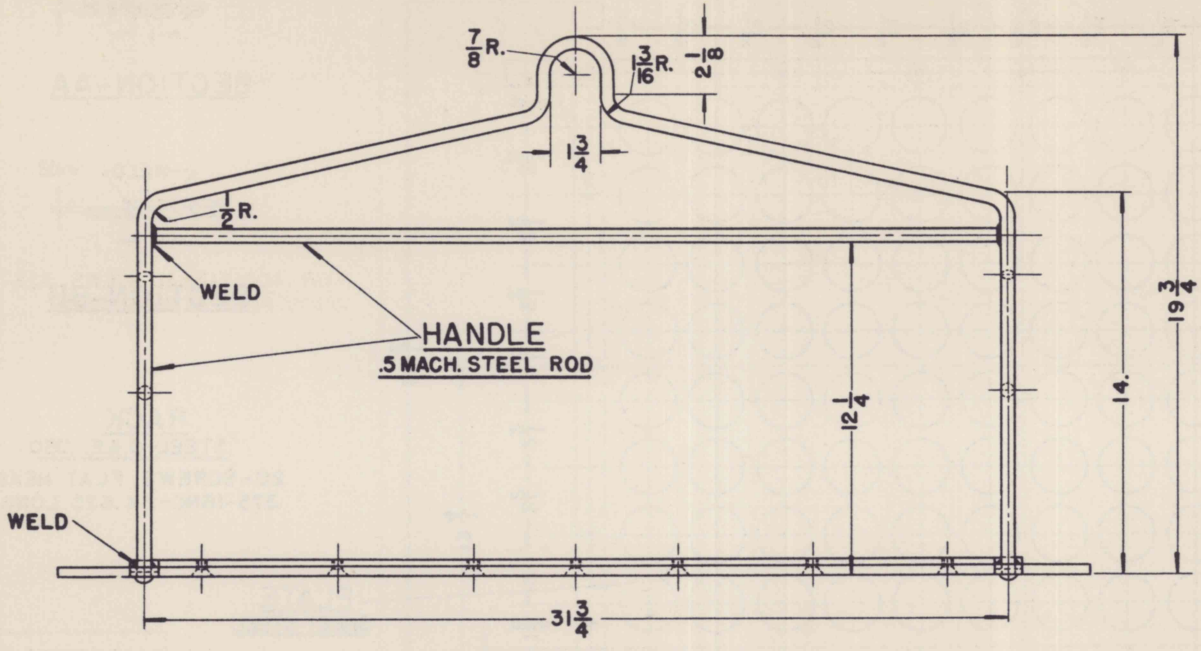

FRONT VIEW

PERTAINS TO		
DRAWING NO.	PIECE MARK	REV. DATE
71-2-96	96A	4-18-40
71-2-100	100A	4-18-40

NOTE:-
FOR ADDITIONAL VIEWS SEE
DRGS. FB17241 & FB17243

REVISIONS

CASE, CARTRIDGE, 37 MM., M16 & M17
OPERATIONS:- ANNEAL FOR TAPER & FINAL MOUTH

FRANKFORD ARSENAL MAY 1, 1940

SUBMITTED
J. C. Alford
CAPT. ORD. DEPT., U. S. A.

APPROVED
ORD. DEPT., U. S. A.

DRAFTSMAN	TRACER	LINE DR'SMAN
H. J. G.	H. J. G.	W. K. S.
CHECKER	CHECKER	CH'F DR'SMAN

FB17242

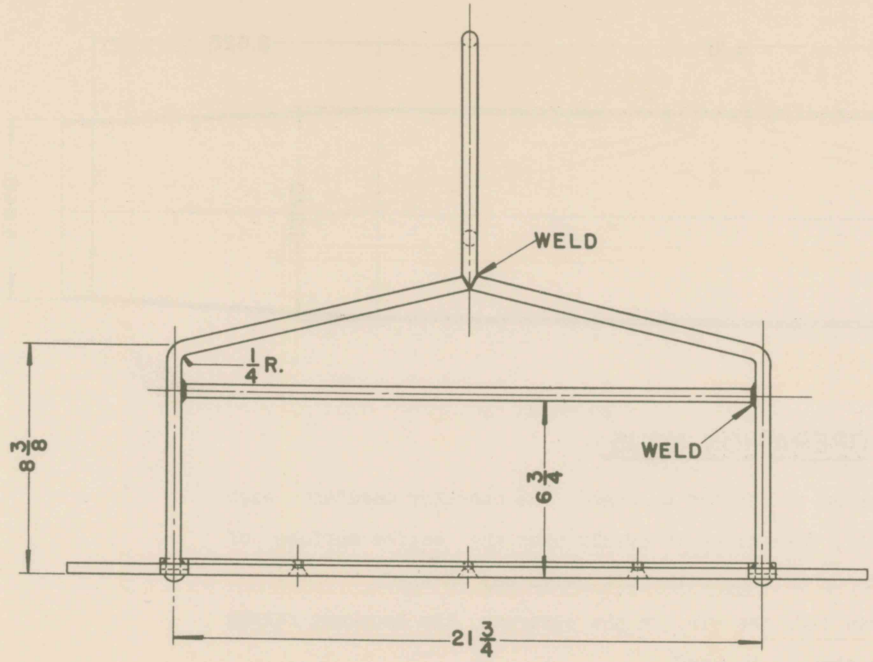

SIDE VIEW

NOTE:-
FOR ADDITIONAL VIEWS SEE
DRGS. FB17241 & FB17242

PERTAINS TO		
DRAWING NO.	PIECE MARK	REV. DATE
71-2-96	96A	4-18-40
71-2-100	100A	4-18-40

REVISIONS

CASE, CARTRIDGE, 37 MM., M16 & M17
OPERATIONS:-ANNEAL FOR TAPER
& FINAL MOUTH

FRANKFORD ARSENAL MAY 1, 1940

SUBMITTED
J. C. Alford
CAPT. ORD. DEPT., U. S. A.

APPROVED
ORD. DEPT., U. S. A.

DRAFTSMAN	TRACER	HEADGUNMAN
H. J. G.	H. J. G.	W. R. K.
CHECKER	CHECKER	CH'F DR'SMAN

FB17243

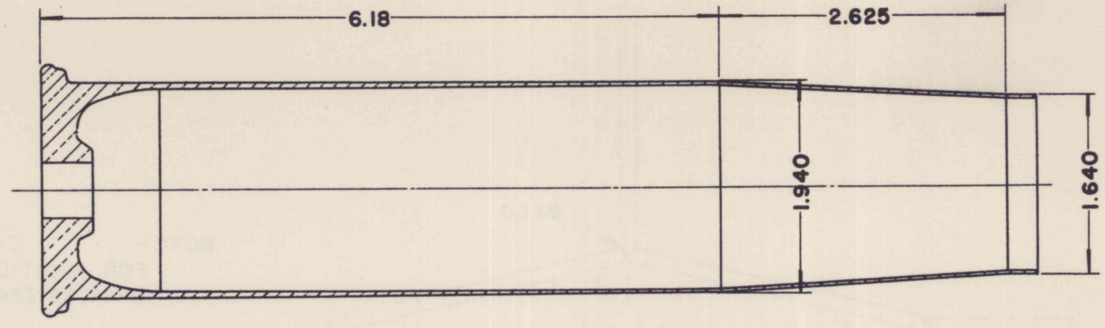

OPERATION NO. 15

The lubricant for this operation is applied by hand. The operator moistens each hand with neatsfoot or soluble oil, then wipes it evenly over the entire surface of the case, except the base. Gloves or mittens with felt palms may be used.

The punch forces the case down into the die, on the upstroke, the knockout raises the case out of the die and it is removed by hand.

A mechanical press equipped with dial feed is used for this operation.

PERTAINS TO		
DRAWING NO.	PIECE MARK	REV. DATE
71-2-96	96A	4-18-40
71-2-100	100A	4-18-40

R-271-IL

REVISIONS

CASE, CARTRIDGE, 37 MM., M16 & M17

OPERATION:-

FIRST TAPER

FRANKFORD ARSENAL MAY 1, 1940

SUBMITTED CAPT. ORD. DEPT., U. S. A.

APPROVED ORD. DEPT., U. S. A.

DRAFTSMAN	TRACER	LINE OF FIRE
H.J.G.	H.J.G.	W.H.A.
CHECKER	CHECKER	CH'F DR'SMAN

FB 17244

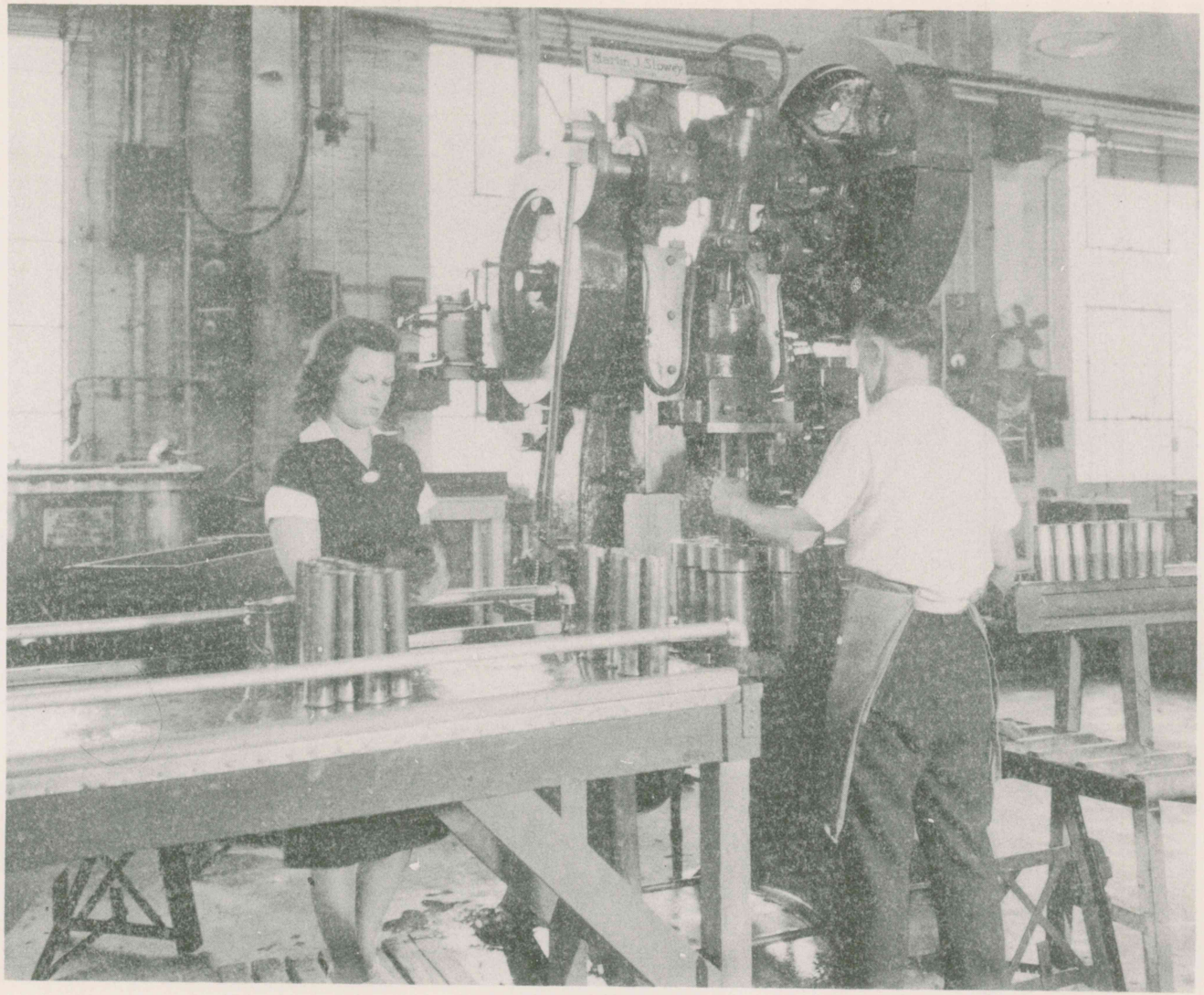

FIRST TAPER
37 M.M. CARTRIDGE CASE

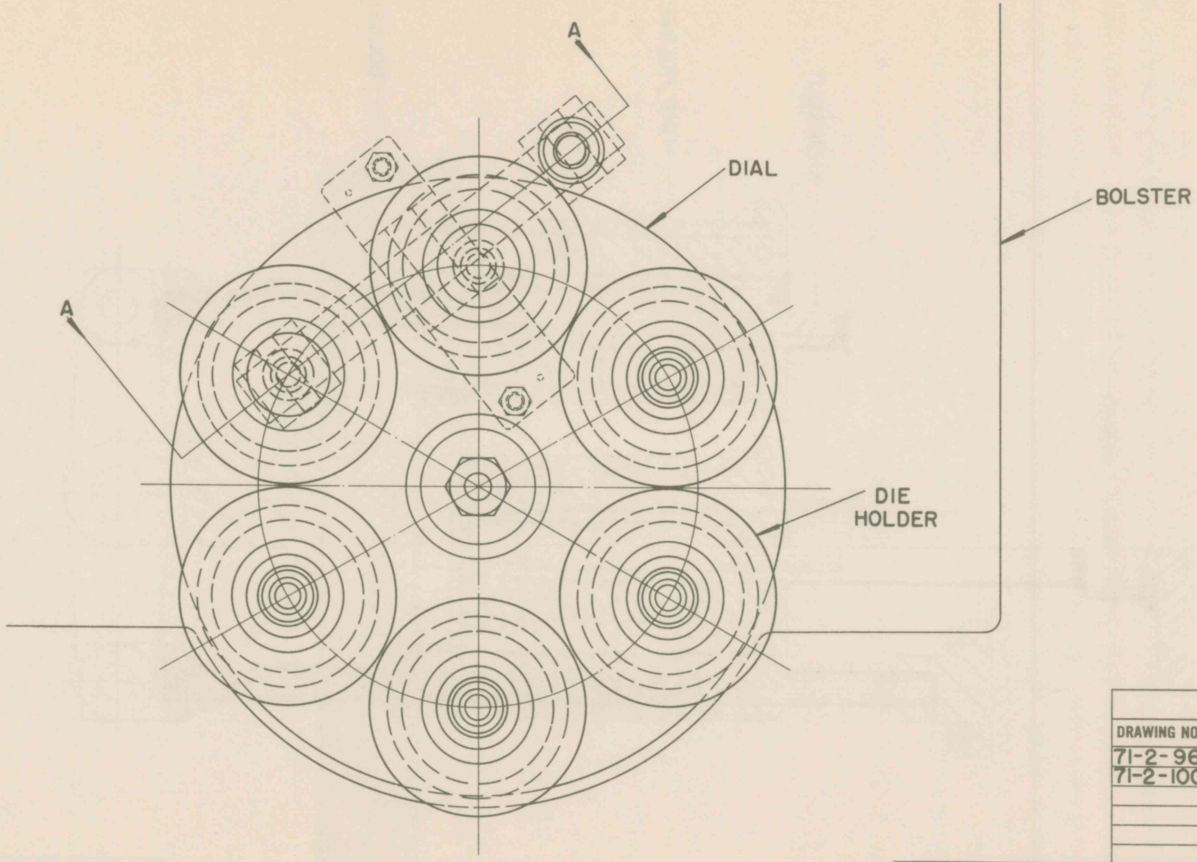

SETUP SKETCH

TOP VIEW DIAL FEED

NOTE:-
FOR SECTION A-A SEE DRG. FB17246 FIRST TAPER
DRG. FB17250 SECOND TAPER

PERTAINS TO		
DRAWING NO.	PIECE MARK	REV. DATE
71-2-96	96A	4-18-40
71-2-100	100A	4-18-40

REVISIONS

CASE, CARTRIDGE, 37MM., M16 & M17
OPERATION:- FIRST & SECOND TAPER

FRANKFORD ARSENAL MAY 1, 1940

SUBMITTED
Joe Alford
CAPT. ORD. DEPT., U. S. A.

APPROVED
ORD. DEPT., U. S. A.

DRAFTSMAN	TRACER	CHIEF DRAFTSMAN
CHECKER	CHECKER	CH'F DR'SMAN

FB17245

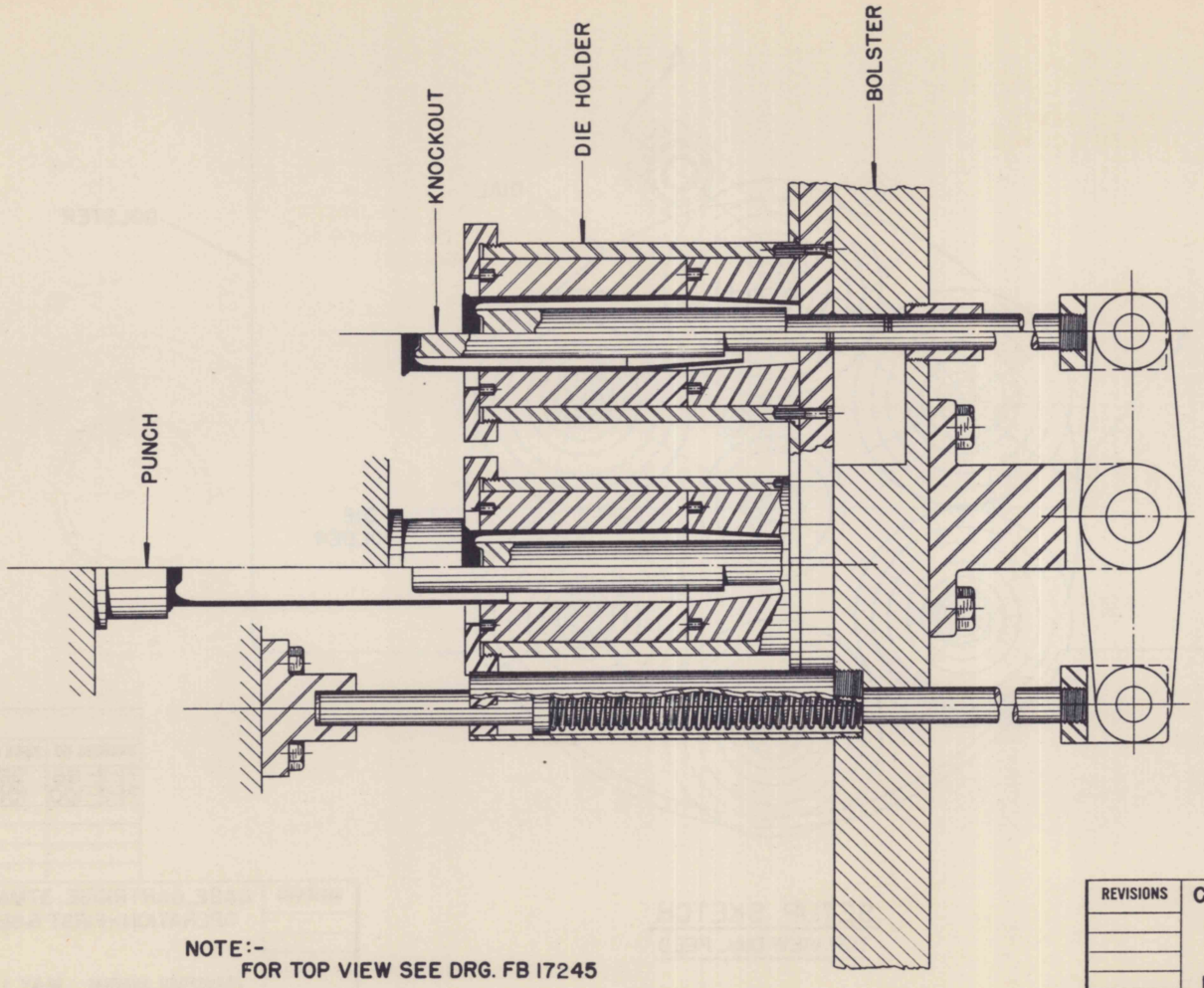

SECTION - A - A

NOTE:-
FOR TOP VIEW SEE DRG. FB 17245

PERTAINS TO		
DRAWING NO.	PIECE MARK	REV. DATE
71-2-96	96A	4-18-40
71-2-100	100A	4-18-40

REVISIONS

CASE, CARTRIDGE, 37MM., M16 & M17
OPERATION:- FIRST TAPER

FRANKFORD ARSENAL MAY 1, 1940

SUBMITTED
CAPT. ORD. DEPT., U. S. A.
APPROVED
ORD. DEPT., U. S. A.

DRAFTSMAN | TRACER | CONG. DRAFTSMAN
CHECKER | CHECKER | CH'T DR'SMAN

FB17246

STAMP:-FB 17247

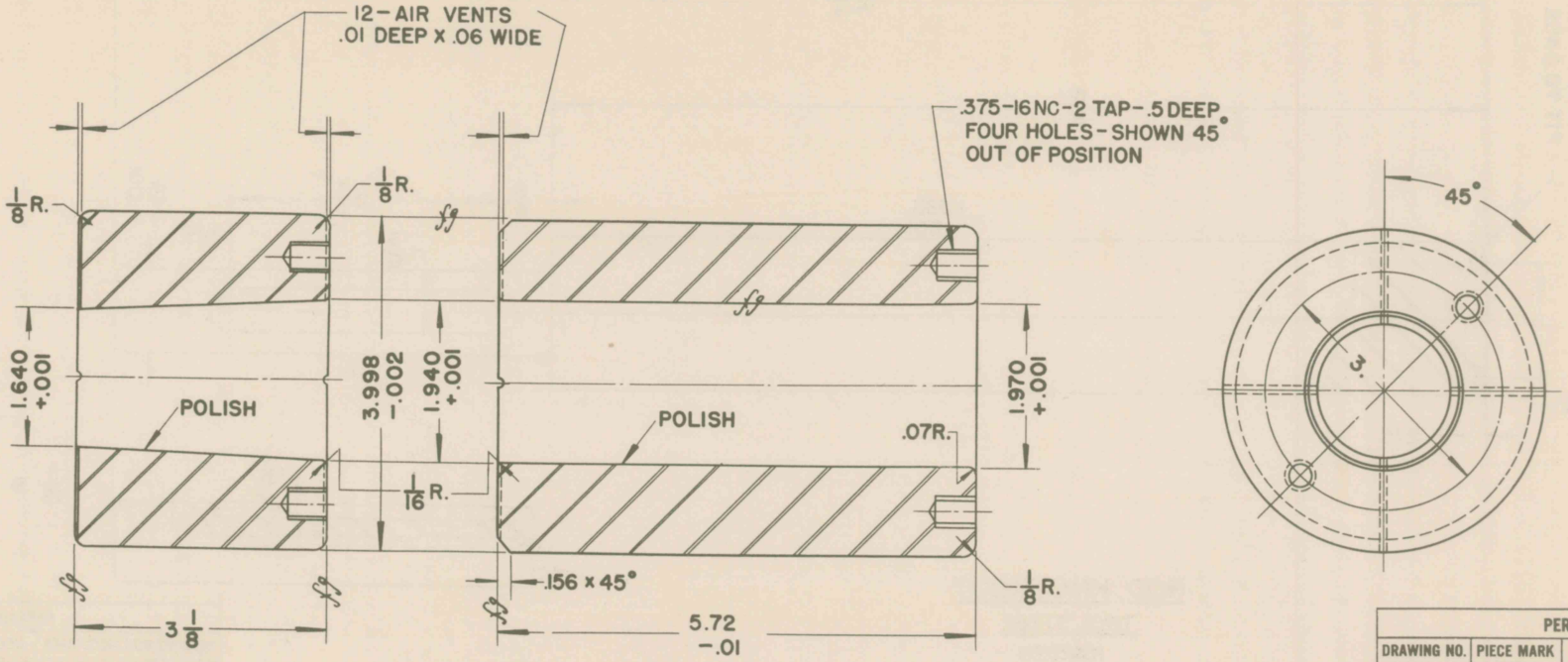

DIE
TOOL STEEL
HARDEN

PERTAINS TO		
DRAWING NO.	PIECE MARK	REV. DATE
71-2-96	96A	4-18-40
71-2-100	100A	4-18-40

R-271-25

REVISIONS

CASE, CARTRIDGE, 37MM., M16 & M17
OPERATION:- FIRST TAPER

FRANKFORD ARSENAL MAY 1, 1940

SUBMITTED
J.O.C. Alford
CAPT. ORD. DEPT., U. S. A.

APPROVED
ORD. DEPT., U. S. A.

DRAFTSMAN	TRACER	LIT'G DR'SMAN
	F.D.A.	W.H.R.
CHECKER	CHECKER	CH'F DR'SMAN

FB17247

STAMP:-FB17248

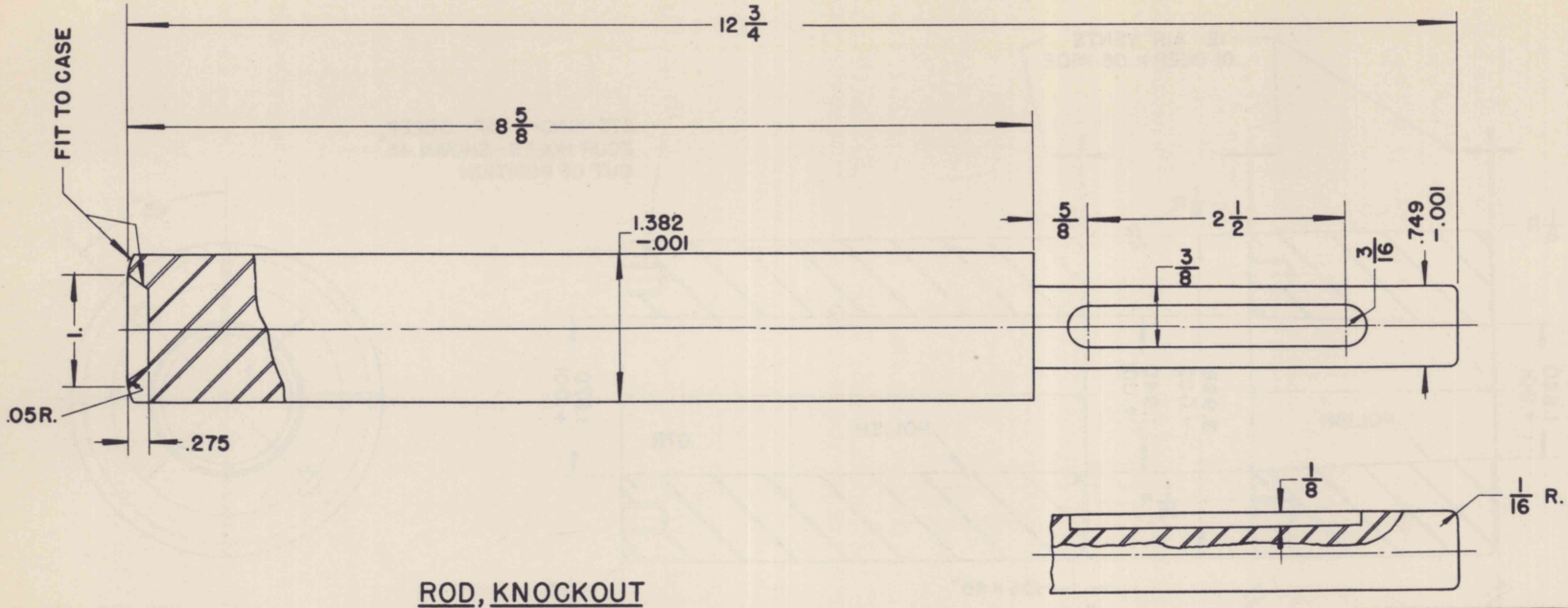

ROD, KNOCKOUT

TOOL STEEL

HARDEN

PERTAINS TO		
DRAWING NO.	PIECE MARK	REV. DATE
71-2-96	96A	4-18-40
71-2-100	100A	4-18-40

R-271-26

REVISIONS

CASE, CARTRIDGE, 37 MM., M16 & M17

OPERATION:- FIRST & SECOND TAPER

FRANKFORD ARSENAL MAY 1, 1940

SUBMITTED J. C. Alford CAPT. ORD. DEPT., U. S. A.

APPROVED ORD. DEPT., U. S. A.

DRAFTSMAN | TRACER F.O.A. | DR'BR'MAN

CHECKER | CHECKER | CH'F DR'SMAN

FB17248

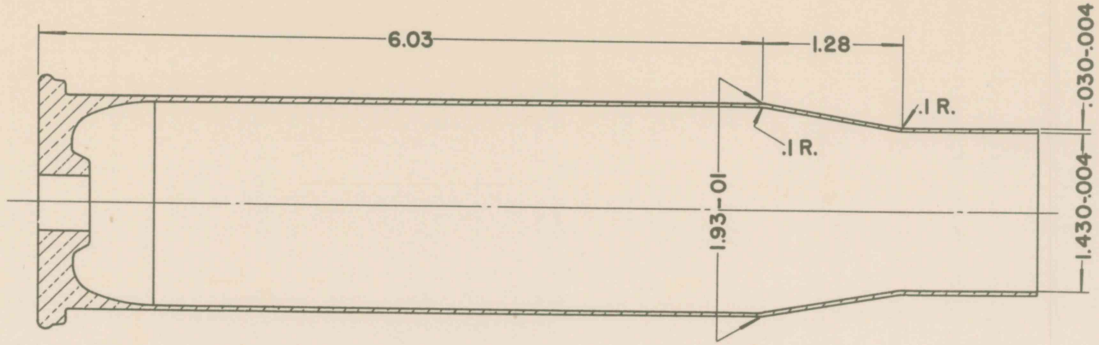

OPERATION NO. 16

This operation is performed in the same manner as operation No. 15.

PERTAINS TO		
DRAWING NO.	PIECE MARK	REV. DATE
71-2-96	96A	4-18-40
71-2-100	100A	4-18-40

R-271-IM

REVISIONS	CASE, CARTRIDGE, 37 MM., M16 & M17 OPERATION:- FINAL TAPER FRANKFORD ARSENAL MAY 1, 1940			
	SUBMITTED CAPT. ORD. DEPT., U. S. A.	DRAFTSMAN	TRACER H.J.G.	L'DG DRAFTSMAN
		CHECKER	CHECKER	CH'F DR'SMAN
	APPROVED ORD. DEPT., U. S. A.	FB17249		

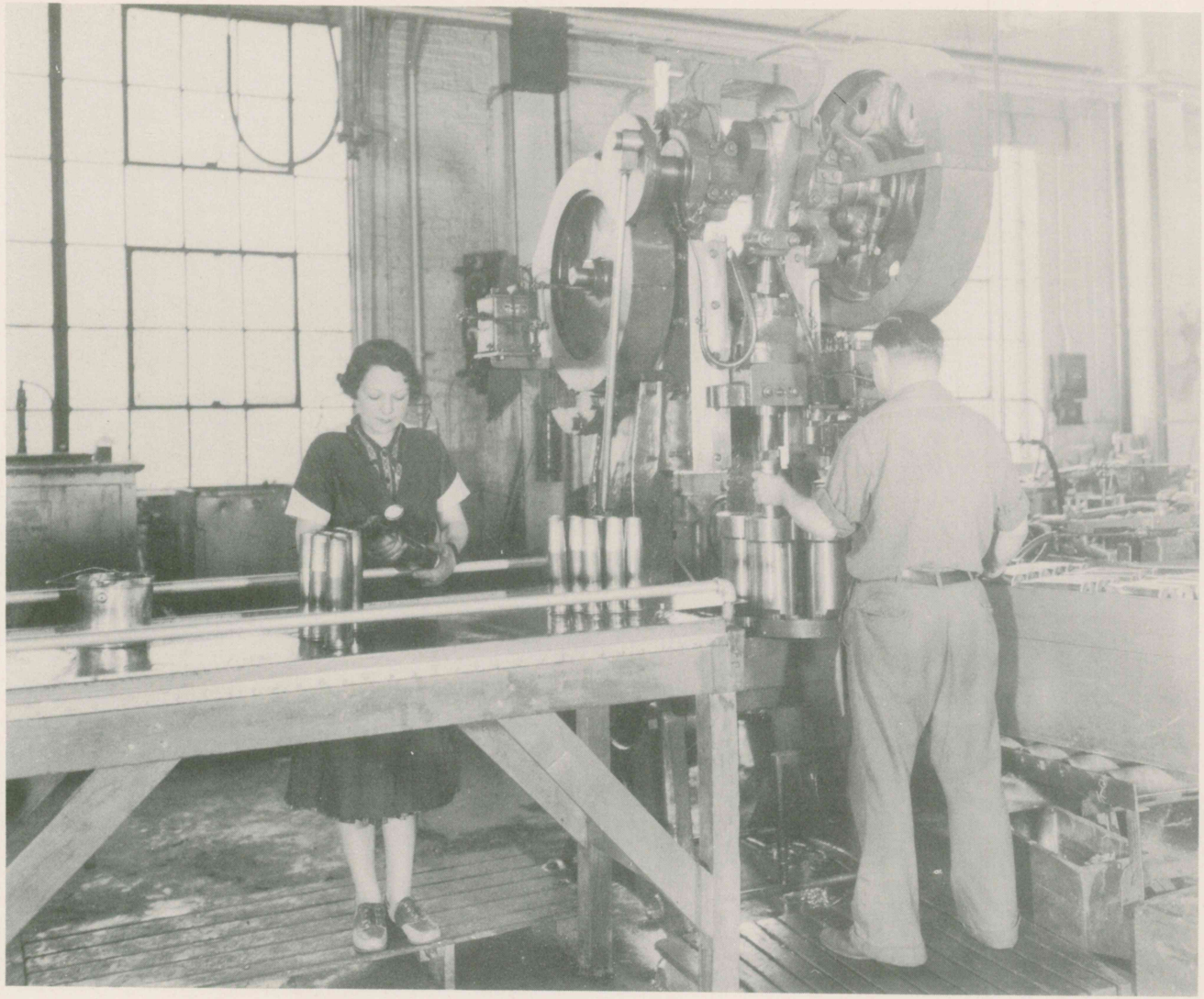

SECOND TAPER
37 M.M. CARTRIDGE CASE

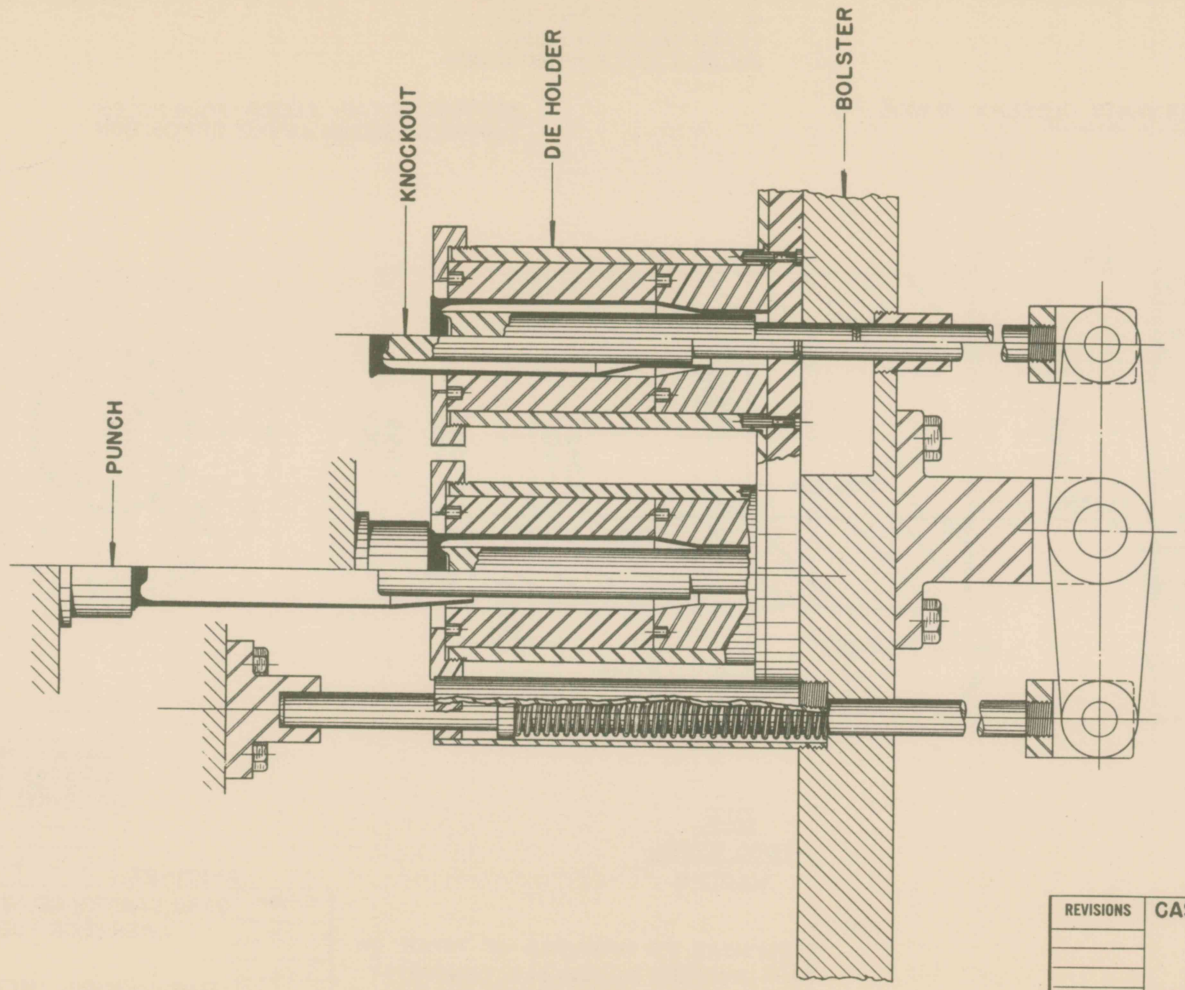

SECTION - A - A

PERTAINS TO		
DRAWING NO.	PIECE MARK	REV. DATE
71-2-96	96A	4-18-40
71-2-100	100A	4-18-40

REVISIONS

CASE, CARTRIDGE, 37MM., M16 & M17
OPERATION:-SECOND TAPER

FRANKFORD ARSENAL MAY 1, 1940

SUBMITTED
F. C. Aylard
CAPT. ORD. DEPT., U. S. A.

APPROVED
ORD. DEPT., U. S. A.

DRAFTSMAN CHECKER: M.K.K.
TRACER CHECKER: M.K.S.
LAYOUT DR'SMAN CH'F DR'SMAN: M.K.K.

FB17250

NOTE:-
FOR TOP VIEW SEE DRG. FB 17245

STAMP:-FB 17251

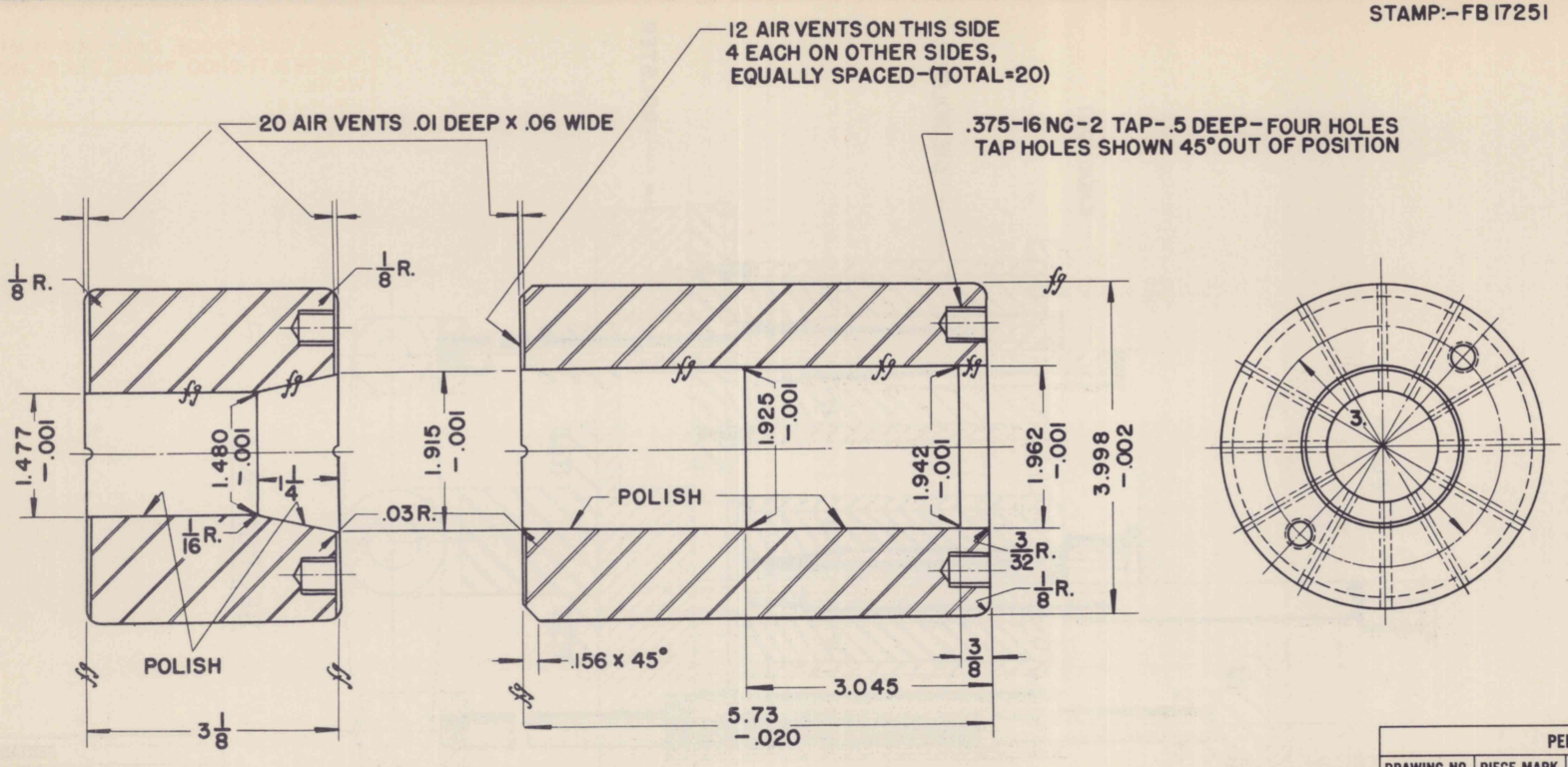

DIE

TOOL STEEL

HARDEN

NOTE:-

FROM HEAD TO SHOULDER OF TAPER ON CASE MAXIMUM ALLOWABLE CONCAVITY TO BE .006 ON SIDE OR .012 ON DIA.

PERTAINS TO		
DRAWING NO.	PIECE MARK	REV. DATE
71-2-96	96A	4-18-40
71-2-100	100A	4-18-40

R-271-27

REVISIONS

CASE, CARTRIDGE, 37 MM., M16 & M17
OPERATION:-SECOND TAPER

FRANKFORD ARSENAL MAY 1, 1940

SUBMITTED
J. C. Alford
CAPT. ORD. DEPT., U. S. A.

APPROVED
ORD. DEPT., U. S. A.

DRAFTSMAN | TRACER | MAT'L. FOREMAN
CHECKER | CHECKER | CHIEF DR'SMAN

FB 17251

MARKING:-
37MM, CARTRIDGE CASE M16 & M17
71-2-96 & 71-2-100 INSIDE DIA. AT MOUTH
WORK
FB 17252

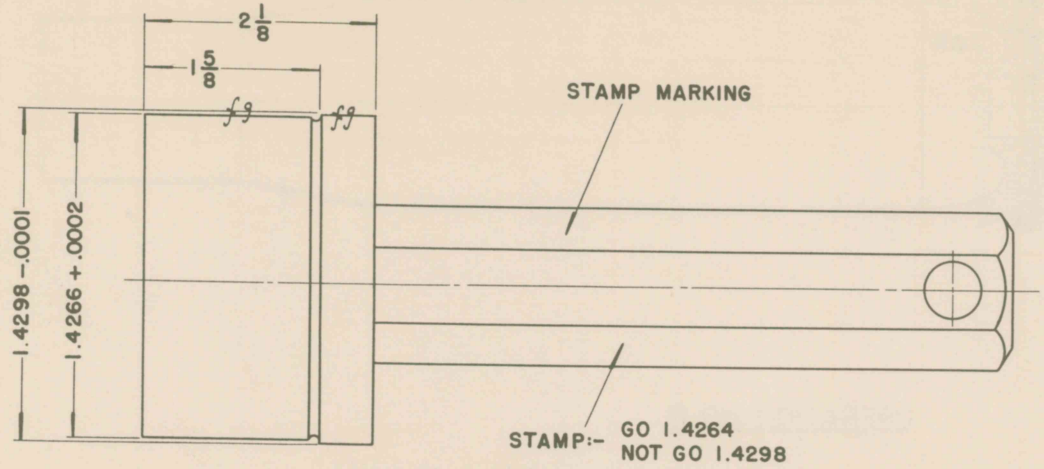

PROGRESSIVE PLUG GAGE
AMERICAN GAGE DESIGN STANDARD
HARDEN

PERTAINS TO		
DRAWING NO.	PIECE MARK	REV. DATE
71-2-96	96A	4-18-40
71-2-100	100A	4-18-40

LAP fg SURFACES
REMOVE ALL SHARP EDGES

REVISIONS	CASE, CARTRIDGE, 37MM., M16 & M17 INSIDE DIA. OF MOUTH GAGE			
	FRANKFORD ARSENAL MAY 1, 1940			
	SUBMITTED 70C Ayers CAPT. ORD. DEPT., U. S. A.	DRAFTSMAN H.J.G. CHECKER	TRACER H.J.G. CHECKER	L. ORD. DR'SMAN W. R. L. CH'F DR'SMAN
	APPROVED ORD. DEPT., U. S. A.	FB 17252		

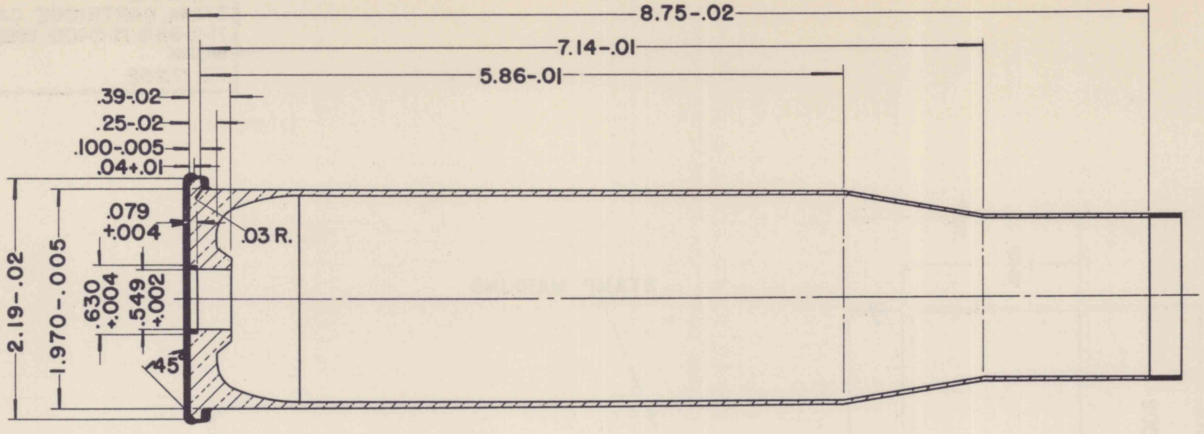

OPERATION NO. 17

This operation is performed on a special automatic Cartridge lathe with magazine feed, manufactured by the Coulter Automatic Machine Company, Bridgeport, Conn. This machine faces the open end at the same time the head is being finished and is a very satisfactory machine for the job.

PERTAINS TO		
DRAWING NO.	PIECE MARK	REV. DATE
71-2-96	96A	4-18-40

R-271-IN

REVISIONS

CASE, CARTRIDGE, 37 MM., M16
OPERATION:-
FINISH MACHINE HEAD
& TRIM TO LENGTH
FRANKFORD ARSENAL MAY 1, 1940

SUBMITTED
CAPT. ORD. DEPT., U. S. A.
APPROVED
ORD. DEPT., U. S. A.

DRAFTSMAN	TRACER	LOFTSMAN
H.J.G.	H.J.G.	
CHECKER	CHECKER	CH'F DR'SMAN

FB 17253

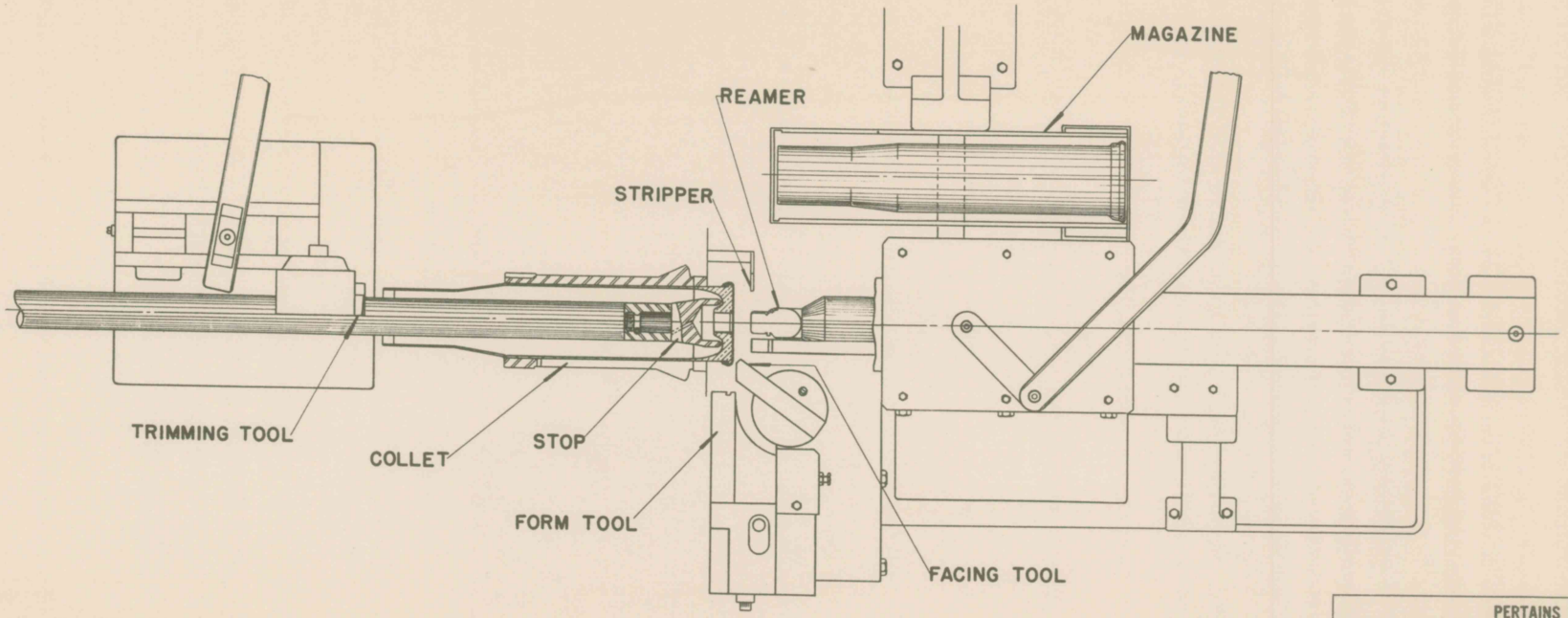

SETUP SKETCH

PERTAINS TO		
DRAWING NO.	PIECE MARK	REV. DATE
71-2-96	96A	4-18-40
71-2-100	100A	4-18-40

REVISIONS

CASE, CARTRIDGE, 37MM., M16 & M17
OPERATION:- FINISH MACHINE
HEAD & TRIM TO LENGTH

FRANKFORD ARSENAL MAY 1, 1940

SUBMITTED
70C Cafard
CAPT. ORD. DEPT., U. S. A.

APPROVED
ORD. DEPT., U. S. A.

DRAFTSMAN	TRACER	LAYOUT MAN
H.J.G.	H.J.G.	W.L.O.
CHECKER	CHECKER	CH'F DR'SMAN

FB 17254

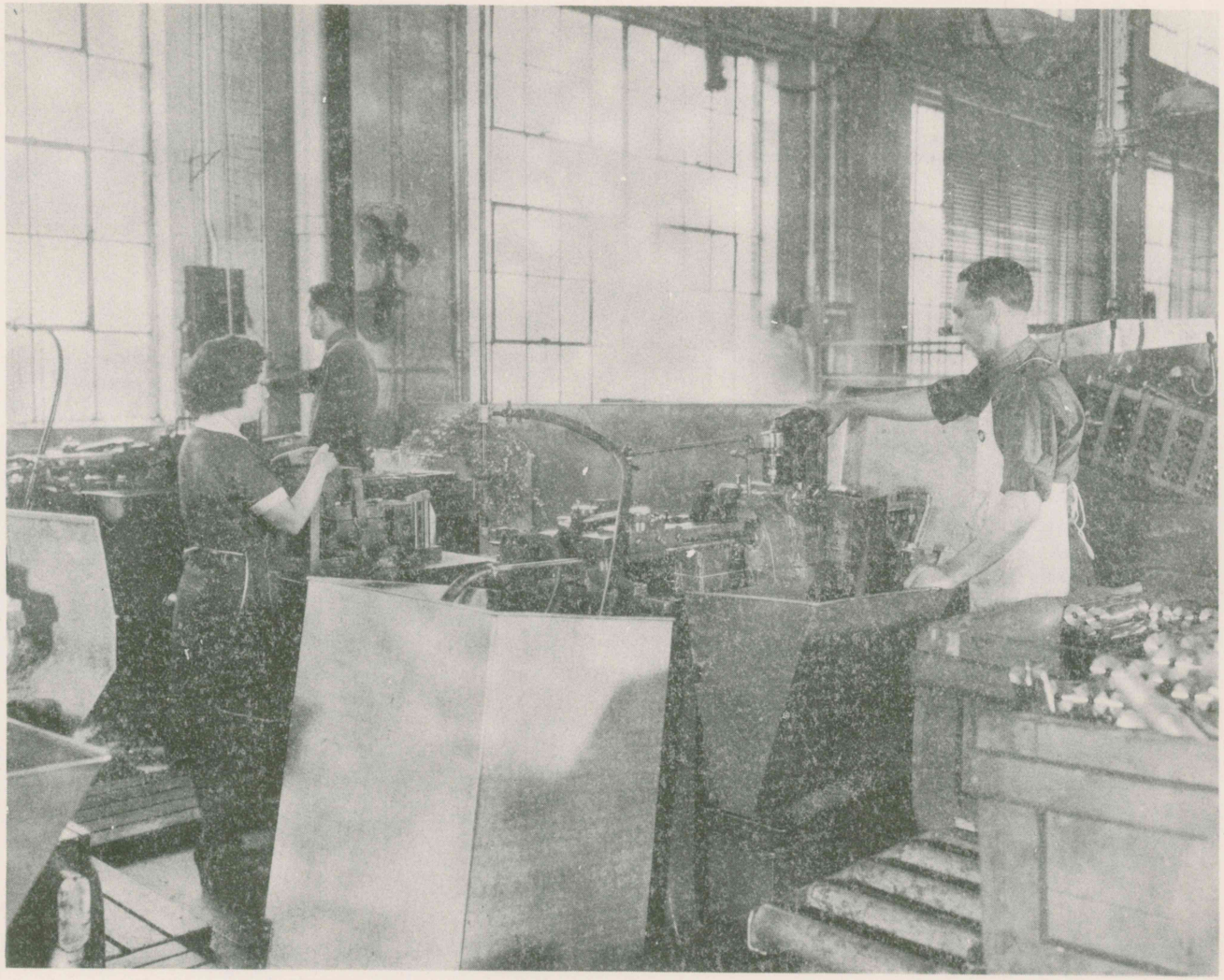

MACHINING HEAD
37 M.M. CARTRIDGE CASE

STAMP:-FB 17255

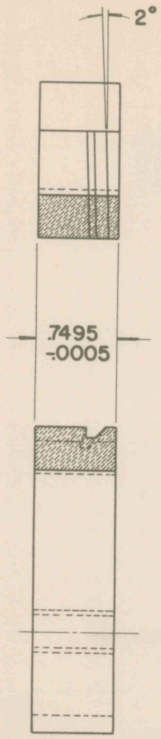

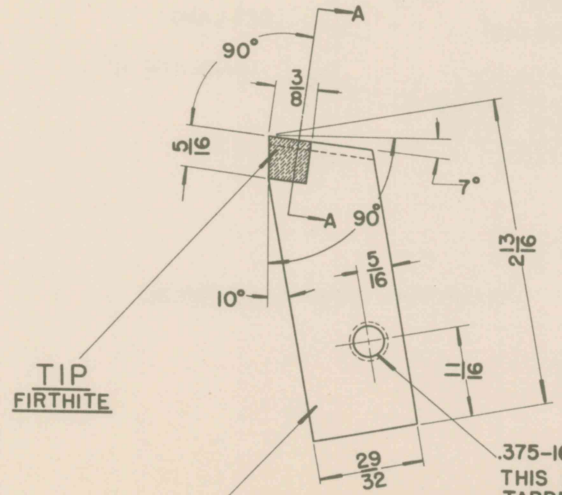

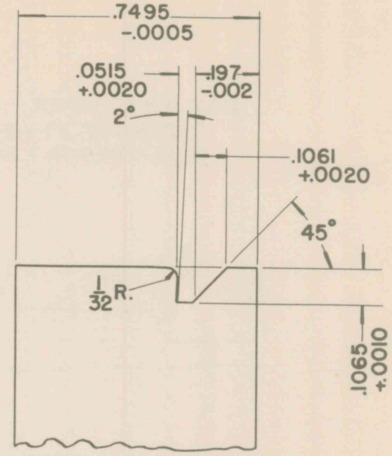

ENLARGED VIEW
DIMENSIONS TAKEN THRU-A-A

NOTE:-
HOLDER HAS SETUP ANGLE OF 10° GIVING TOOL 0° RAKE AND 7° CLEARANCE

TOOL, FORMING

PERTAINS TO		
DRAWING NO.	PIECE MARK	REV. DATE
71-2-96	96A	4-18-40

R-271-29A

REVISIONS

CASE, CARTRIDGE, 37MM., M16
OPERATION:- FINISH MACHINE HEAD & TRIM TO LENGTH

FRANKFORD ARSENAL MAY 1, 1940

SUBMITTED
CAPT. ORD. DEPT., U. S. A.
APPROVED
ORD. DEPT., U. S. A.

DRAFTSMAN	TRACER	LAYOUT DRAFTSMAN
	H. J. G.	
CHECKER	CHECKER	CH'F DR'SMAN

FB17255

STAMP:-FB 17256

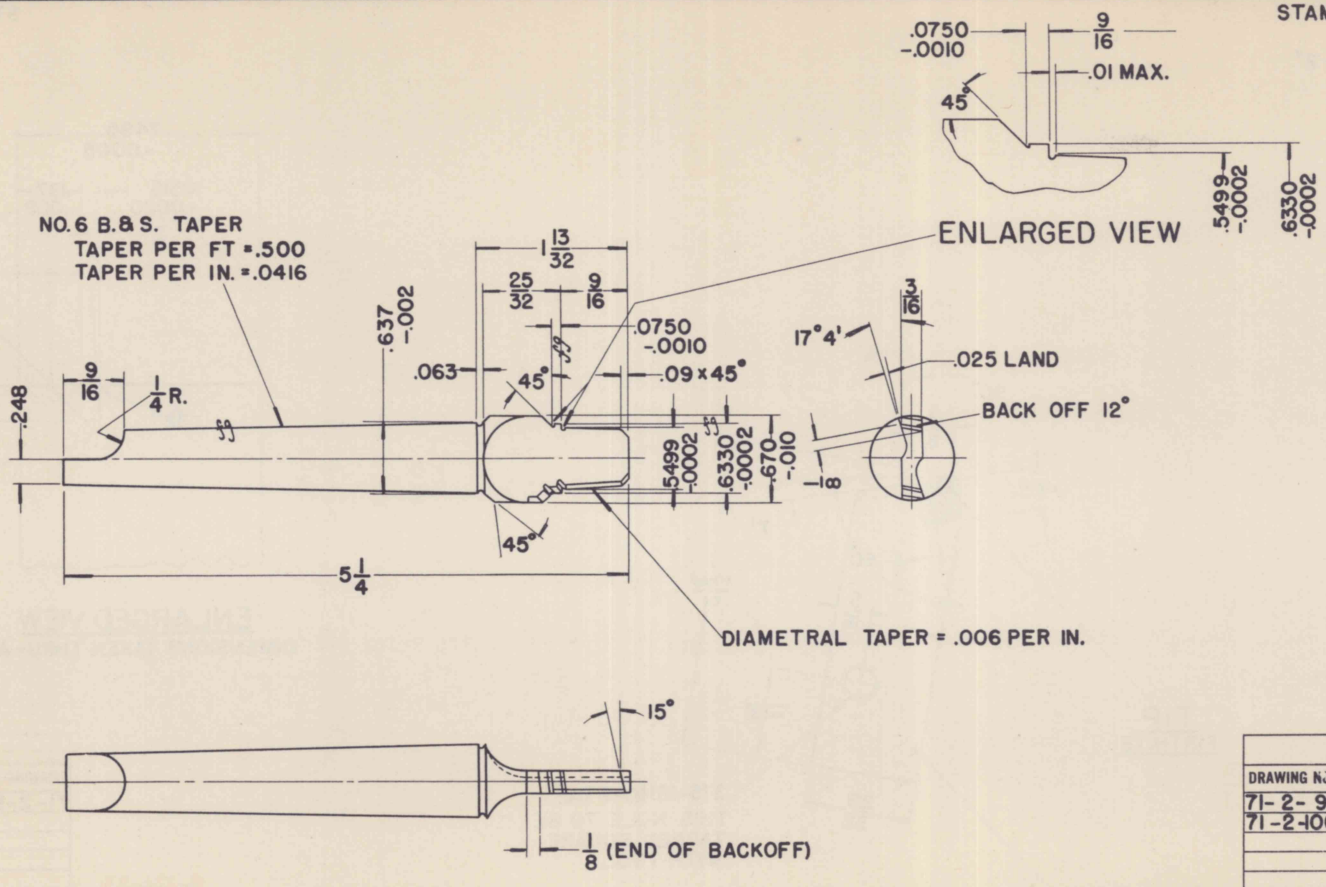

REAMER
H.S. STEEL
HARDEN

PERTAINS TO		
DRAWING NO.	PIECE MARK	REV. DATE
71-2-96	96A	4-18-40
71-2-100	100A	4-18-40

R-271-31

REVISIONS

CASE, CARTRIDGE, 37 MM., M16 & M17
OPERATION:-FINISH MACHINE
HEAD & TRIM TO LENGTH

FRANKFORD ARSENAL MAY 1, 1940

SUBMITTED F. O. C. Alford CAPT. ORD. DEPT., U. S. A.

APPROVED ORD. DEPT., U. S. A.

DRAFTSMAN | TRACER H.J.G. | LAYOUT MAN W.R.S.
CHECKER | CHECKER | CH'F DR'SMAN

FB17256

STAMP:-FB 17257

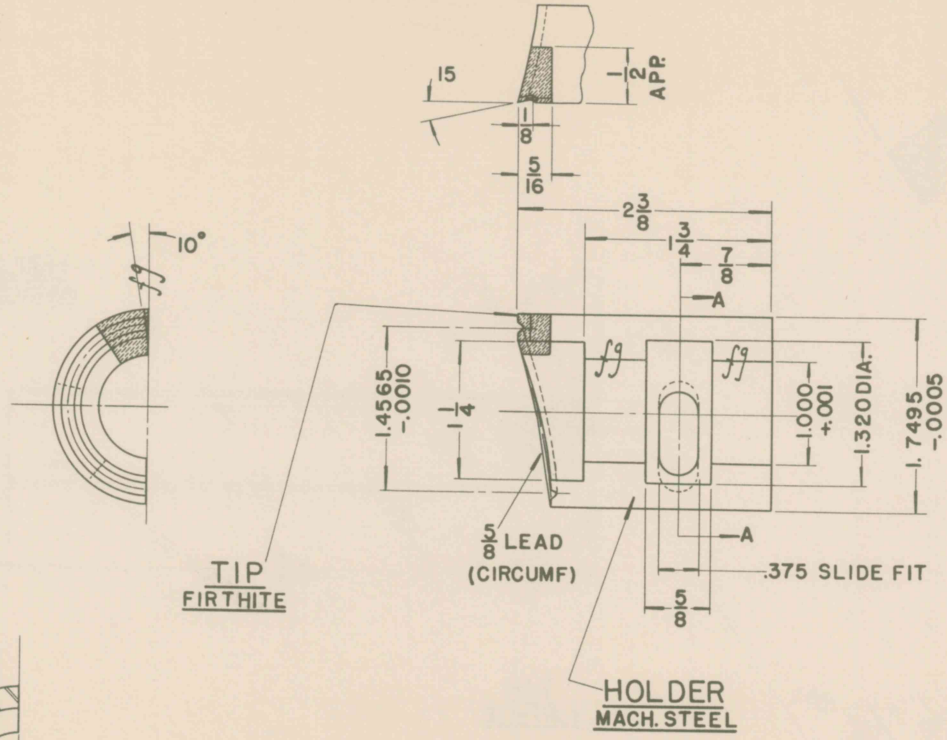

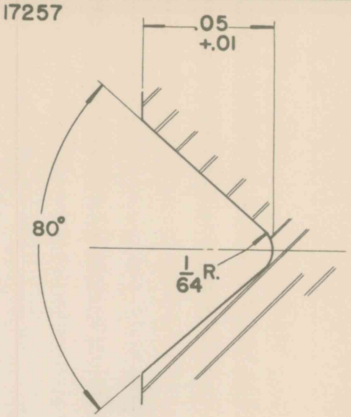

ENLARGED VIEW OF GROOVE

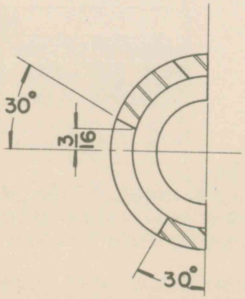

SECTION-A-A

TOOL, TRIMMING

PERTAINS TO		
DRAWING NO.	PIECE MARK	REV. DATE
71-2-96	96A	4-18-40
71-2-100	100A	4-18-40

R-271-33

REVISIONS

CASE, CARTRIDGE, 37 MM., M16 & M17
OPERATION:-FINISH MACHINE HEAD & TRIM TO LENGTH

FRANKFORD ARSENAL MAY 1, 1940

SUBMITTED
CAPT. ORD. DEPT., U. S. A.

DRAFTSMAN | TRACER H.J.G. | LINE DR'SMAN W.R.S.
CHECKER | CHECKER | CH'F DR'SMAN

APPROVED
ORD. DEPT., U. S. A.

FB 17257

STAMP:-FB 17258

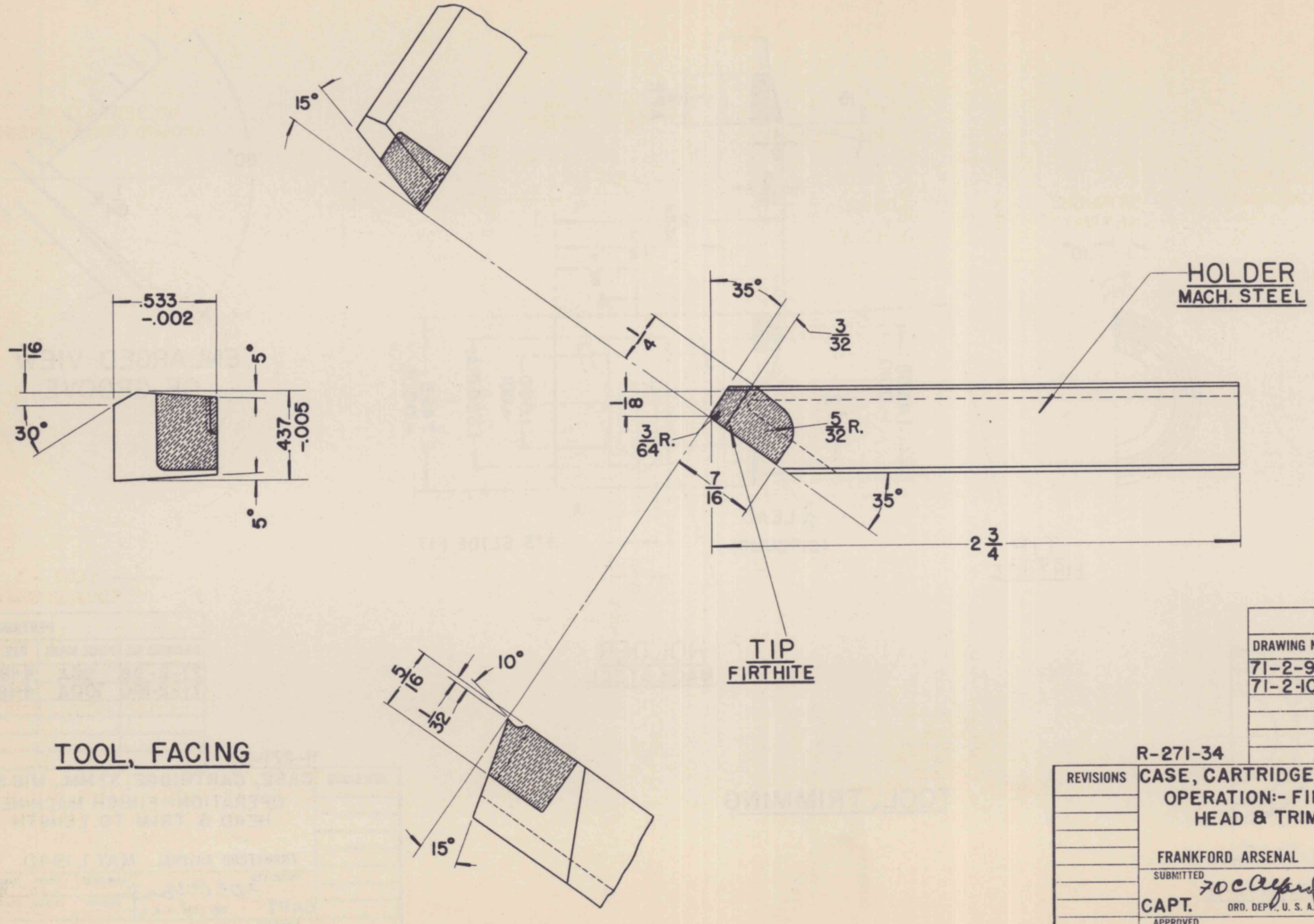

TOOL, FACING

PERTAINS TO		
DRAWING NO.	PIECE MARK	REV. DATE
71-2-96	96A	4-18-40
71-2-100	100A	4-18-40

R-271-34

REVISIONS

CASE, CARTRIDGE, 37 MM., M16 & M17
OPERATION:- FINISH MACHINE
HEAD & TRIM TO LENGTH

FRANKFORD ARSENAL MAY 1, 1940

SUBMITTED
CAPT. ORD. DEPT., U. S. A.

APPROVED
ORD. DEPT., U. S. A.

DRAFTSMAN	TRACER	UNDERSIGNED
	H. J. G.	
CHECKER	CHECKER	CH'F DR'SMAN

FB 17258

STAMP:-FB 17259

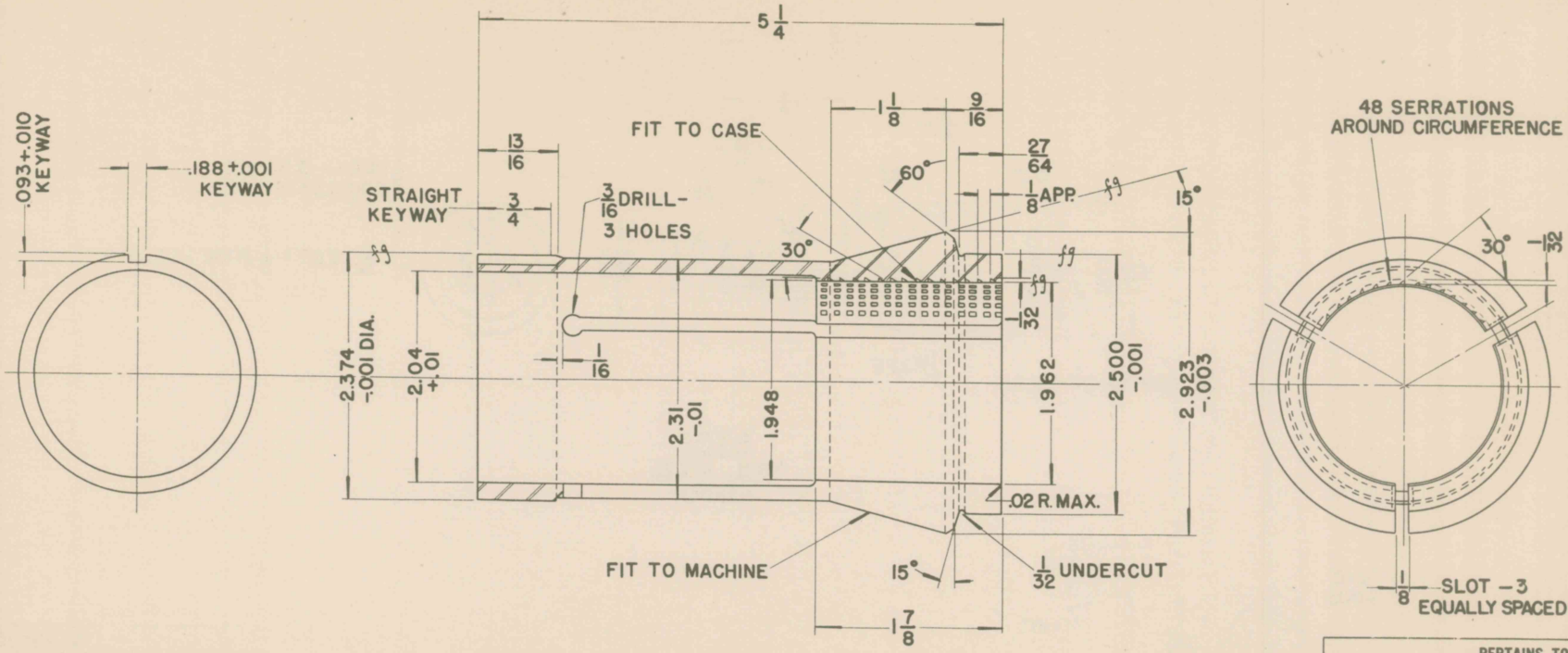

COLLET

TOOL STEEL

HARDEN

TEMPER FOR SPRING

PERTAINS TO		
DRAWING NO.	PIECE MARK	REV. DATE
71-2-96	96A	4-18-40
71-2-100	100A	4-18-40

R-271-35

REVISIONS

CASE, CARTRIDGE, 37 MM., M16 & M17
OPERATION:-FINISH MACHINE
HEAD & TRIM TO LENGTH

FRANKFORD ARSENAL MAY 1, 1940

SUBMITTED Joc Alford CAPT. ORD. DEPT., U. S. A.

APPROVED ORD. DEPT., U. S. A.

DRAFTSMAN	TRACER	DR'G CH'K MAN
	H.J.G.	
CHECKER	CHECKER	CH'F DR'SMAN

FB 17259

STAMP:-FB 17260

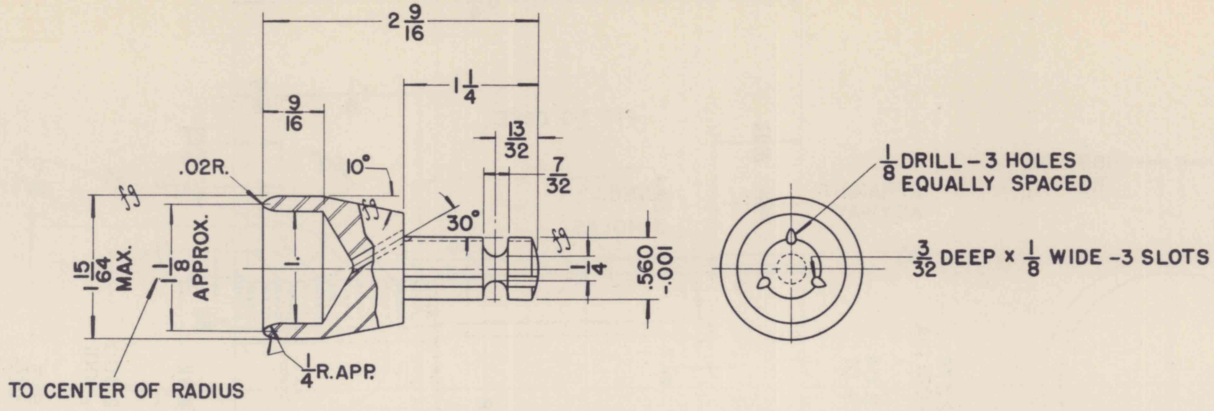

STOP
TOOL STEEL
HARDEN

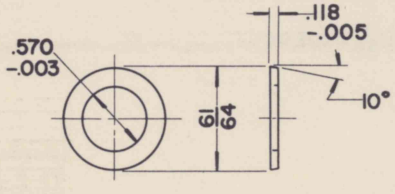

BUSHING
BRONZE

PERTAINS TO		
DRAWING NO.	PIECE MARK	REV. DATE
71-2-96	96A	4-18-40
71-2-100	100A	4-18-40

R-271-36

REVISIONS

CASE, CARTRIDGE, 37 MM., M16 & M17
OPERATION:-FINISH MACHINE
HEAD & TRIM TO LENGTH

FRANKFORD ARSENAL MAY 1, 1940

SUBMITTED J O C Aspard CAPT. ORD. DEPT., U. S. A.

APPROVED ORD. DEPT., U. S. A.

DRAFTSMAN	TRACER	KEY DRAFTSMAN
	H. J. G.	
CHECKER	CHECKER	CH'F DR'SMAN

FB 17260

MARKING :-
37 MM., CARTRIDGE CASE, M16 & M17
71-2-96 & 71-2-100 DIA. UNDER FLANGE
WORK
FB 17261

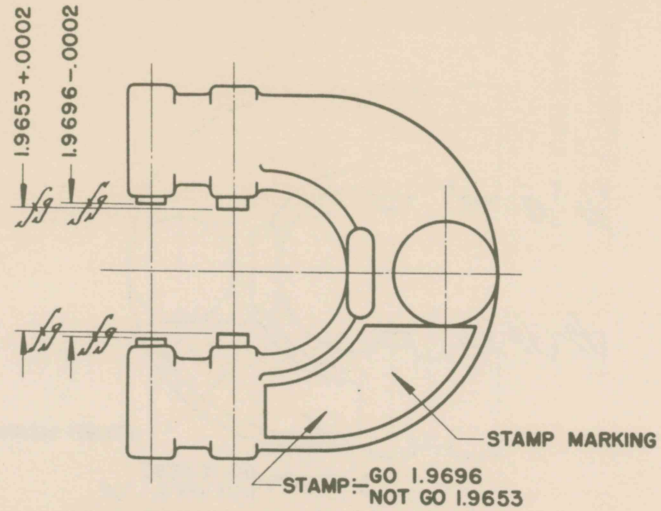

ADJUSTABLE SNAP GAGE
COMMERCIAL

PERTAINS TO		
DRAWING NO.	PIECE MARK	REV. DATE
71-2-96	96A	4-18-40
71-2-100	100A	4-18-40

REVISIONS	CASE, CARTRIDGE, 37 MM., M16 & M17 GAGE FOR DIA. UNDER FLANGE			
	FRANKFORD ARSENAL MAY 1, 1940			
	SUBMITTED CAPT. ORD. DEPT. U.S.A.	DRAFTSMAN H.J.G.	TRACER H.J.G.	L. & G. DRAFTSMAN
	APPROVED ORD. DEPT., U.S.A.	CHECKER	CHECKER	CH. F. OR. GAGE
		FB 17261		

MARKING :-
37 MM., CARTRIDGE CASE, M16
71-2-96- DIA. FLANGE
WORK
FB 17262

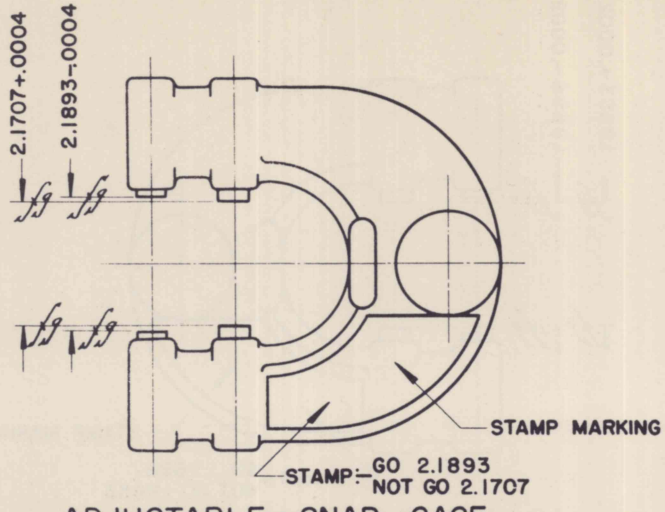

ADJUSTABLE SNAP GAGE
COMMERCIAL

PERTAINS TO		
DRAWING NO.	PIECE MARK	REV. DATE
71-2-96	96A	4-18-40

REVISION:	CASE, CARTRIDGE, 37 MM., M16 GAGE FOR DIA. FLANGE			
	FRANKFORD ARSENAL MAY 1, 1940			
	SUBMITTED CAPT. ORD. DEPT., U. S. A.	DRAFTSMAN H.J.G.	TRACER H.J.G.	LEAD DRAFTSMAN
		CHECKER	CHECKER	CH'F DR'SMAN
	APPROVED ORD. DEPT., U. S. A.	FB 17262		

MARKING:-
37MM. CARTRIDGE CASE, M16 & M17
71-2-96 & 71-2-100-THICKNESS FLANGE
WORK
FB 17263

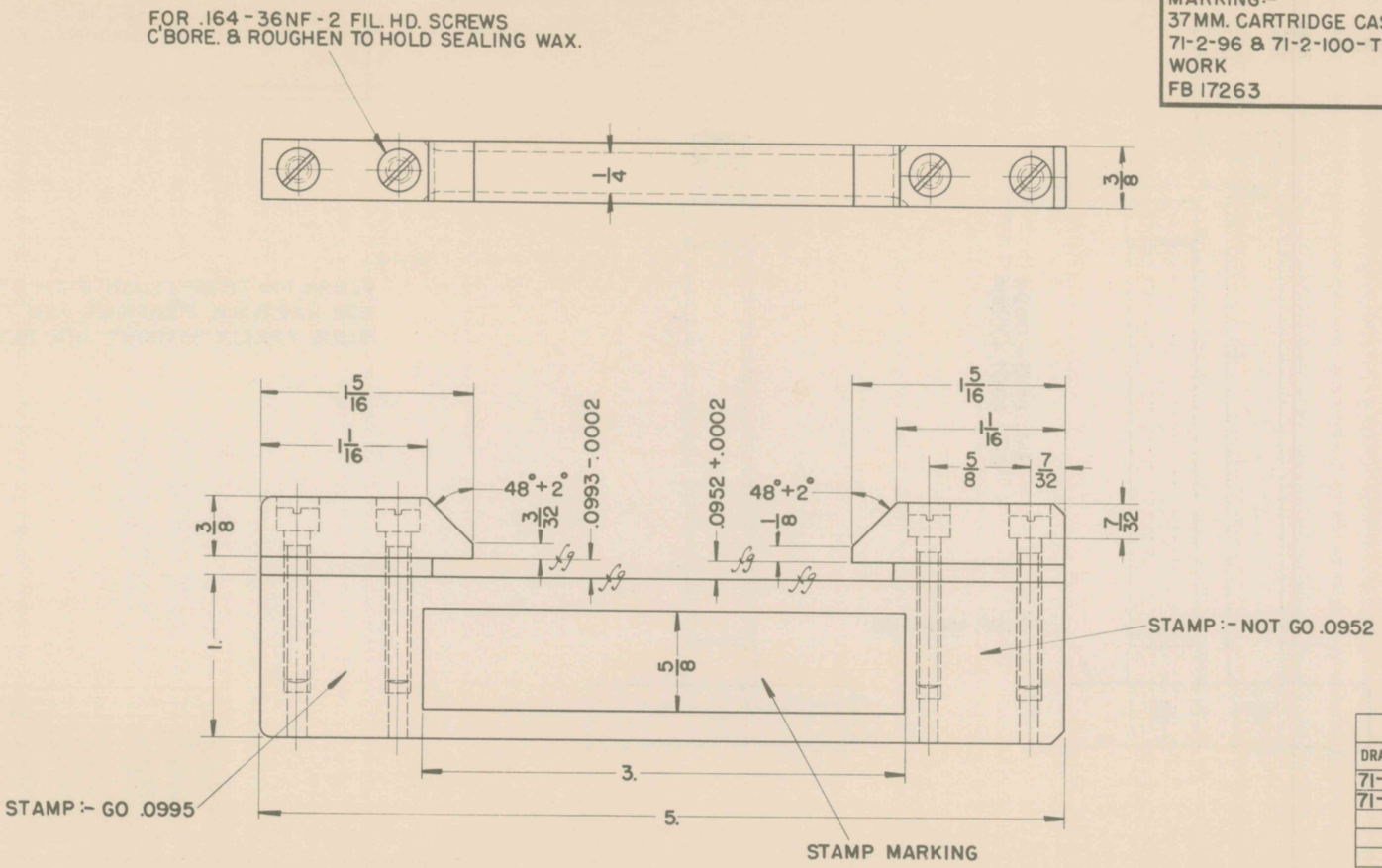

PERTAINS TO		
DRAWING NO.	PIECE MARK	REV. DATE
71-2-96	96A	4-18-40
71-2-100	100A	4-18-40

SNAP GAGE

TOOL STEEL
HARDEN

4-SCREWS, FIL. HD., .164-36NF-2 X .75 LONG

LAP ⌭ SURFACES
REMOVE ALL SHARP EDGES

REVISIONS

CASE, CARTRIDGE, 37MM., M16 & M17
GAGE FOR THICKNESS FLANGE

FRANKFORD ARSENAL MAY 1, 1940

SUBMITTED
70 C Alpers
CAPT. ORD. DEPT., U. S. A.

APPROVED
ORD. DEPT., U. S. A.

DRAFTSMAN	TRACER	LEADGRSMAN
C.D.	C.D.	A.K.D.
CHECKER	CHECKER	CH'F DR'SMAN

FB 17263

MARKING:-
37MM. CARTRIDGE CASE M16 & M17
71-2-96 & 71-2-100 THICKNESS HEAD
WORK
FB 17264

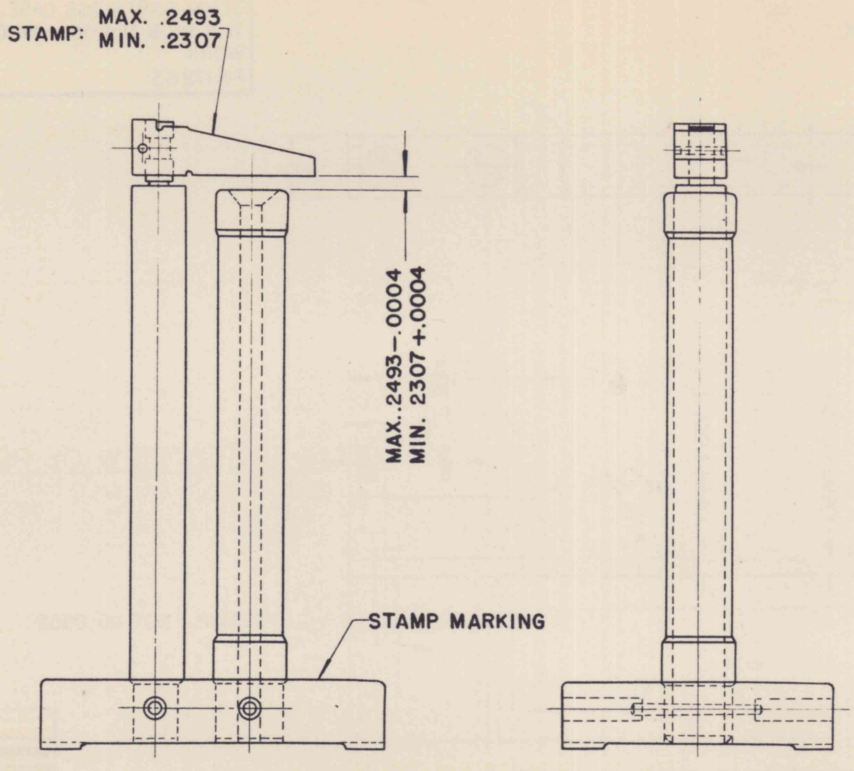

NOTE:-
FLUSH PIN TO BE FLUSH WITH STEPS FOR MAX. & MIN. POSITIONS, ARM TO SLIDE FREELY WITHOUT SIDE PLAY

PERTAINS TO		
DRAWING NO.	PIECE MARK	REV. DATE
71-2-96	96A	4-18-40
71-2-100	100A	4-18-40

FLUSH PIN GAGE

REVISIONS

CASE, CARTRIDGE, 37MM., M16 & M17
GAGE FOR THICKNESS HEAD ASSEMBLY

FRANKFORD ARSENAL MAY 1, 1940

SUBMITTED
CAPT. ORD. DEPT., U. S. A.
APPROVED
ORD. DEPT., U. S. A.

DRAFTSMAN H.J.G. CHECKER
TRACER H.J.G. CHECKER
DESIGNSMAN W.K.K. CH'F DR'SMAN

FB 17264

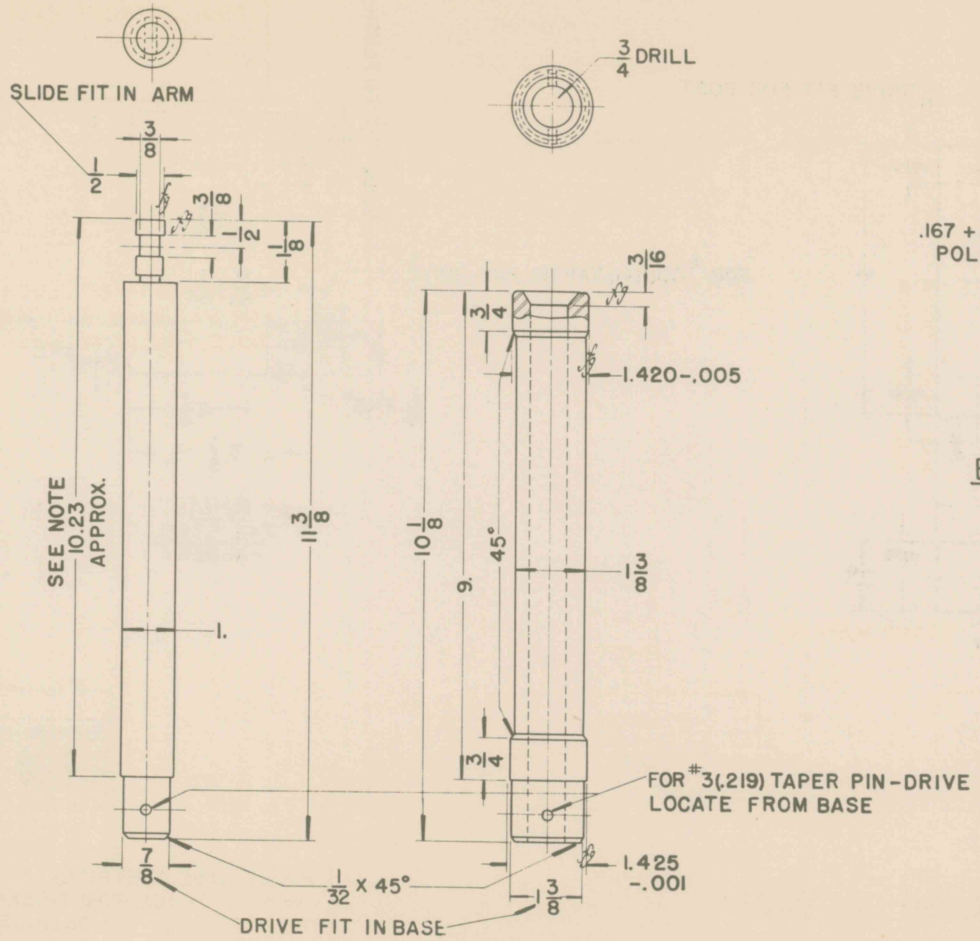

FLUSH PIN
TOOL STEEL
HARDEN

POST
TOOL STEEL
HARDEN

2-PINS, TAPER, STEEL #3 (.219) X 2.5 LONG

LAP fg SURFACES
REMOVE ALL SHARP EDGES

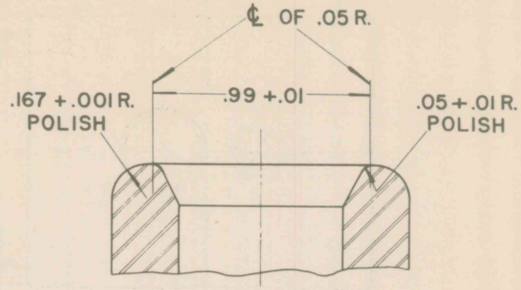

ENLARGED VIEW OF POST

PERTAINS TO		
DRAWING NO.	PIECE MARK	REV. DATE
71-2-96	96A	4-18-40
71-2-100	100A	4-18-40

REVISIONS

CASE, CARTRIDGE, 37 MM., M16 & M17
GAGE FOR THICKNESS HEAD
DETAILS

FRANKFORD ARSENAL MAY 1, 1940

SUBMITTED
CAPT. ORD. DEPT., U. S. A.

APPROVED
ORD. DEPT., U. S. A.

DRAFTSMAN	TRACER	LOCOMAN
H.J.G.	H.J.G.	
CHECKER	CHECKER	CH'F DR'SMAN

FB17265

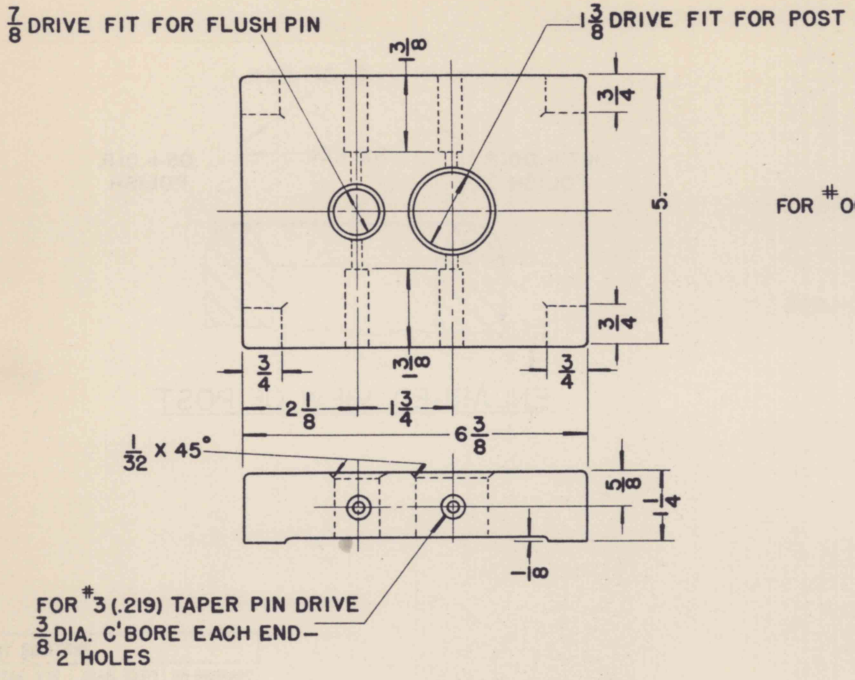

BASE
MACH. STEEL

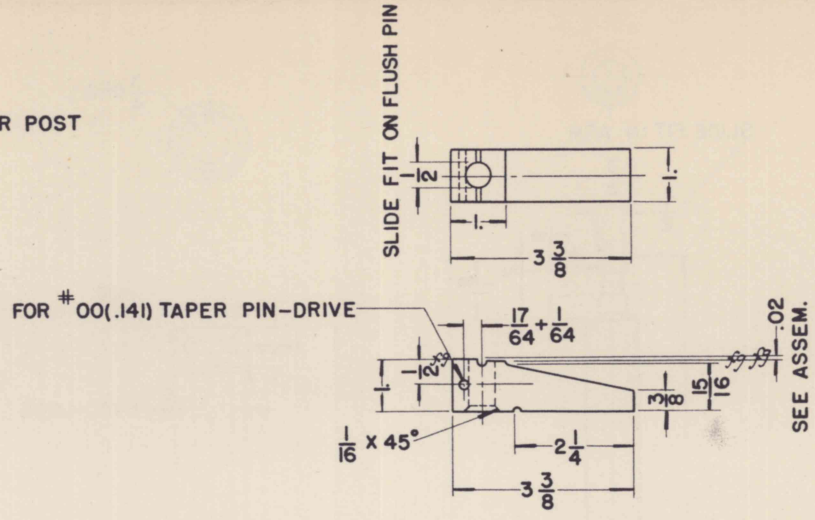

ARM
TOOL STEEL
HARDEN

PERTAINS TO		
DRAWING NO.	PIECE MARK	REV. DATE
71-2-96	96A	4-18-40
71-2-100	100A	4-18-40

LAP fg SURFACES
REMOVE ALL SHARP EDGES

REVISIONS

CASE, CARTRIDGE, 37 MM., M16 & M17
GAGE FOR THICKNESS HEAD
DETAILS

FRANKFORD ARSENAL MAY 1, 1940

SUBMITTED
CAPT. ORD. DEPT., U. S. A.
APPROVED
ORD. DEPT., U. S. A.

DRAFTSMAN	TRACER	LOG DR'SMAN
H.J.G.	H.J.G.	
CHECKER	CHECKER	CH'F DR'SMAN

FB 17266

MARKING:-
37 MM. CARTRIDGE CASE, M16 & M17
71-2-96 & 71-2-100-DIA. PRIMER HOLE
WORK
FB 17267

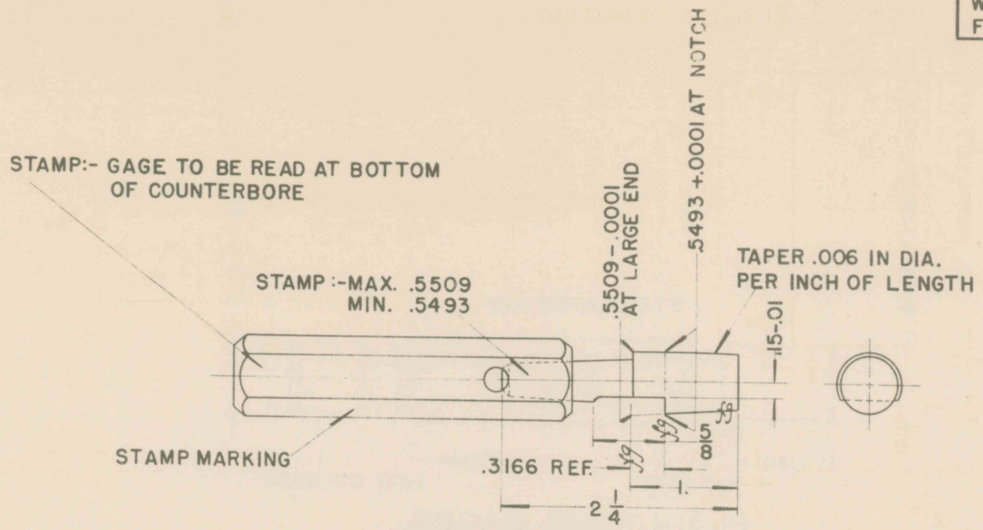

GAGE, TAPER PLUG

AMERICAN GAGE DESIGN STANDARD
HARDEN

LAP fg SURFACES
REMOVE ALL SHARP EDGES

PERTAINS TO		
DRAWING NO.	PIECE MARK	REV. DATE
71-2-96	96A	4-18-40
71-2-100	100A	4-18-40

REVISIONS

CASE, CARTRIDGE, 37 MM., M16 & M17
GAGE FOR DIA. PRIMER HOLE

FRANKFORD ARSENAL MAY 1, 1940

SUBMITTED F. O. Oelbrecht CAPT. ORD DEPT. U. S. A.
DRAFTSMAN H.J.G. CHECKER
TRACER H.J.G. CHECKER
FOREMAN CHIEF DRAFTSMAN
APPROVED ORD. DEPT., U. S. A.

FB 17267

MARKING:--
37 MM., CARTRIDGE CASE, M16 & M17
71-2-96-71-2-100 DIA. PRIMER HOLE C'BORE
WORK
F B 17268

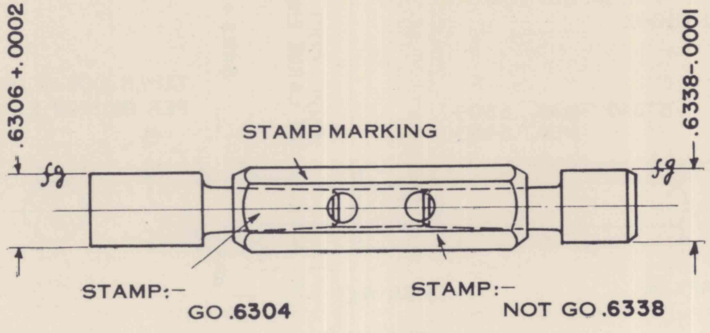

PLAIN PLUG GAGES

AMERICAN GAGE DESIGN STANDARD
HARDEN

PERTAINS TO		
DRAWING NO.	PIECE MARK	REV. DATE
71-2-96	96A	4-18-40
71-2-100	100A	4-18-40

REVISIONS	CASE, CARTRIDGE, 37 MM., M16 & M17 GAGE FOR DIA. PRIMER HOLE C'BORE
	FRANKFORD ARSENAL MAY 1, 1940
	SUBMITTED CAPT. ORD. DEPT., U. S. A. — DRAFTSMAN H.J.G. — TRACER H.J.G. — DIG. DR'SMAN
	APPROVED ORD. DEPT., U. S. A. — CHECKER — CHECKER — CH'F DR'SMAN
	FB 17268

LAP *fg* SURFACES
REMOVE ALL SHARP EDGES

MARKING:-
37 MM. CARTRIDGE CASE, M16 & M17
71-2-96 & 71-2-100-LENGTH PRIMER BOSS
WORK
FB 17269

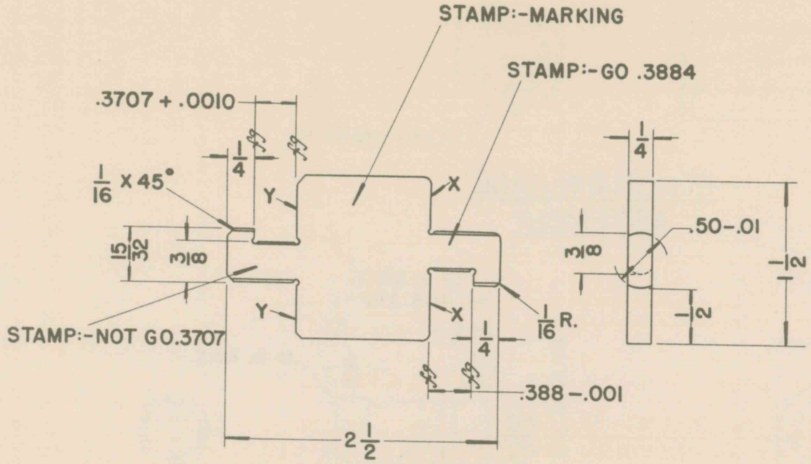

SURFACES X-X & Y-Y
MUST BE IN LINE

SNAP GAGE
TOOL STEEL
HARDEN

PERTAINS TO		
DRAWING NO.	PIECE MARK	REV. DATE
71-2-96	96A	4-18-40
71-2-100	100A	4-18-40

LAP fg SURFACES
REMOVE ALL SHARP EDGES

REVISIONS	CASE, CARTRIDGE, 37 MM., M16 & M17 GAGE FOR LENGTH PRIMER BOSS			
	FRANKFORD ARSENAL MAY 1, 1940			
	SUBMITTED CAPT. ORD. DEPT., U. S. A.	DRAFTSMAN H.J.G. CHECKER	TRACER H.J.G. CHECKER	LAYOUT DR'SMAN CH'F DR'SMAN
	APPROVED ORD. DEPT., U. S. A.	FB17269		

NOTE:- PIN TO BE FLUSH WITH STEPS FOR MAX. & MIN. POSITIONS
PIN TO SLIDE FREELY WITHOUT SIDE PLAY.

MARKING:-
37MM., CARTRIDGE CASE, M16 & M17
71-2-96 & 71-2-100 DEPTH PRIMER HOLE C'BORE
WORK
FB 17270

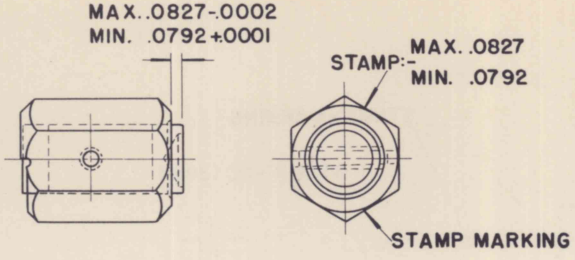

FLUSH PIN GAGE ASSEMBLY

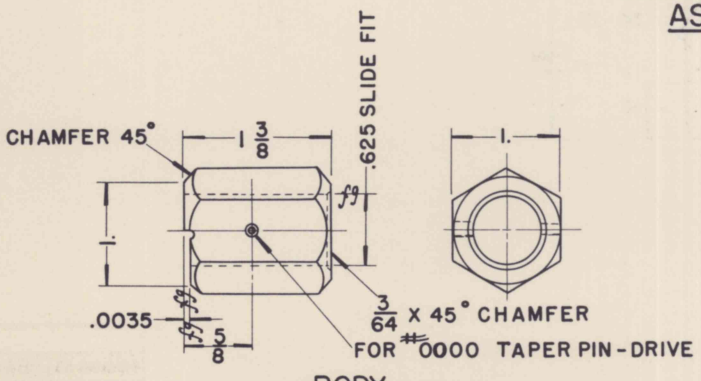

BODY
TOOL STEEL
HARDEN

1- PIN, TAPER, STEEL, #0000 (.109) X 1. LONG

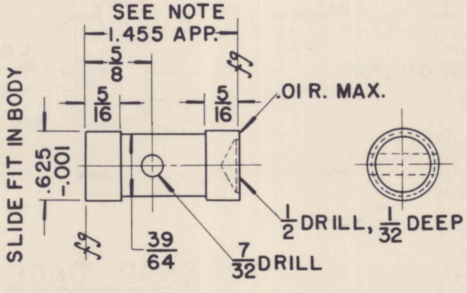

PIN
TOOL STEEL
HARDEN

PERTAINS TO		
DRAWING NO.	PIECE MARK	REV. DATE
71-2-96	96A	4-18-40
71-2-100	100A	4-18-40

REVISIONS

CASE, CARTRIDGE, 37MM., M16 & M17
GAGE FOR DEPTH
PRIMER HOLE C'BORE

FRANKFORD ARSENAL MAY 1, 1940

SUBMITTED
CAPT. ORD. DEPT., U. S. A.
APPROVED
ORD. DEPT., U. S. A.

DRAFTSMAN	TRACER	WORKMAN
H.J.G.	H.J.G.	W.R.G.
CHECKER	CHECKER	CH'F OR'SMAN

FB 17270

MARKING:-
37 MM. CARTRIDGE CASE, M16 & M17
71-2-96 & 71-2-100-CONC. PRIMER HOLE
WORK WITH 1.970 DIA.
FB 17271

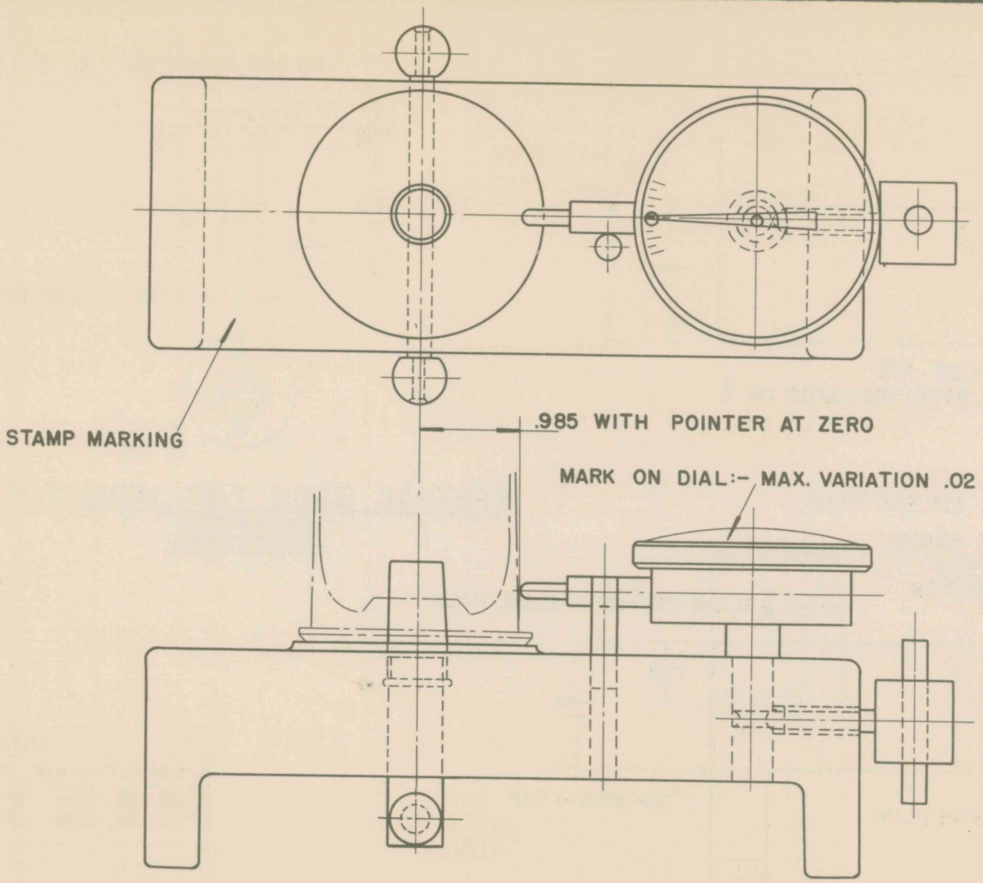

NOTE:-
PLUG TO SLIDE FREELY WITHOUT SHAKE OR SIDE PLAY

PERTAINS TO		
DRAWING NO.	PIECE MARK	REV. DATE
71-2-96	96A	4-18-40
71-2-100	100A	4-18-40

CONCENTRICITY GAGE

1-DIAL INDICATOR, JEWELED BEARINGS, BEZEL CLAMP, 0-25-0-GRAD.,.001

REVISIONS	CASE, CARTRIDGE, 37 MM., M16 & M17 GAGE FOR CONCENTRICITY PRIMER HOLE WITH 1.97 DIA. ASSEMBLY			
	FRANKFORD ARSENAL MAY 1, 1940			
	SUBMITTED J. C. Alford CAPT. ORD. DEPT., U. S. A.	DRAFTSMAN	TRACER H.J.G.	LEAD DR'SMAN W.K.S.
		CHECKER	CHECKER	CH'F DR'SMAN
	APPROVED ORD. DEPT., U. S. A.	FB17271		

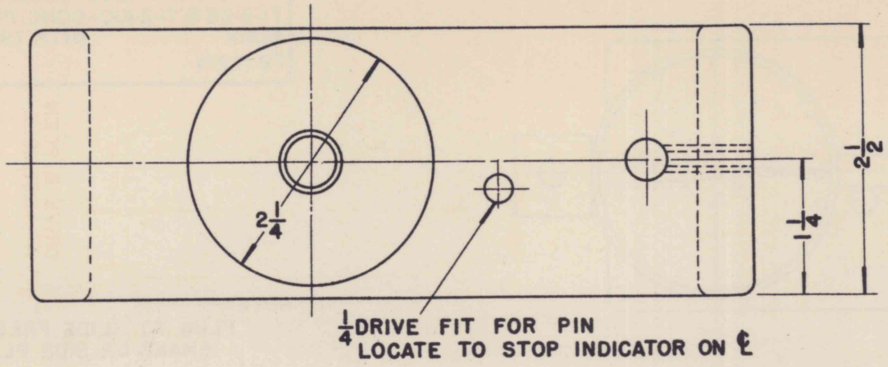

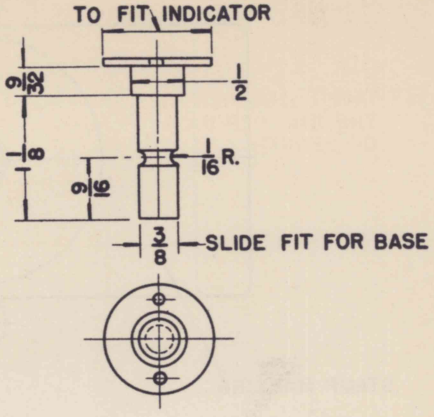

SPECIAL BACK FOR INDICATOR

MACH. STEEL
CASE HARDEN

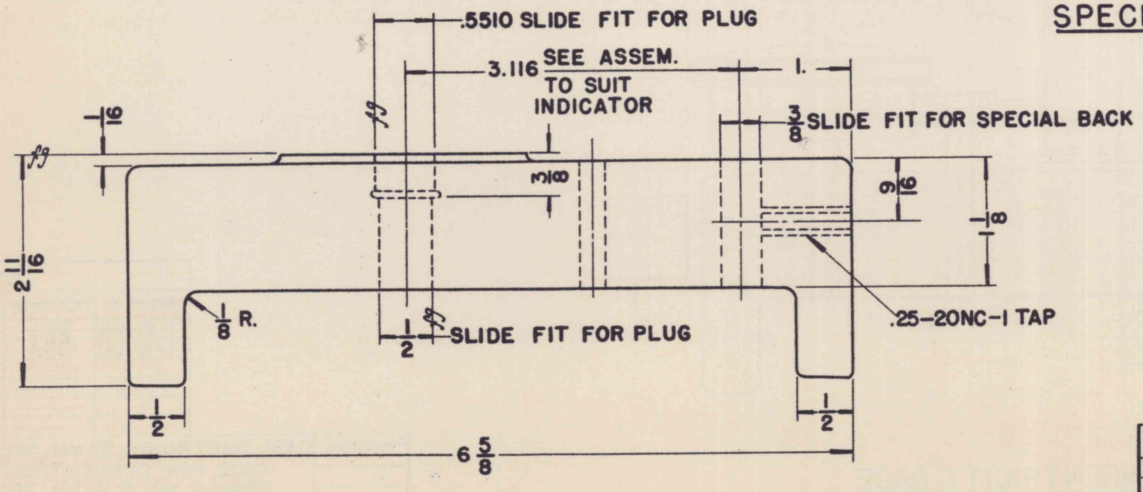

BASE

TOOL STEEL
HARDEN
1-PIN, DRILL ROD, .25 x 1.

LAP ⌗ SURFACES
REMOVE ALL SHARP EDGES

PERTAINS TO		
DRAWING NO.	PIECE MARK	REV. DATE
71-2-96	96A	4-18-40
71-2-100	100A	4-18-40

REVISIONS

CASE, CARTRIDGE, 37MM., M16 & M17
GAGE FOR CONCENTRICITY
PRIMER HOLE WITH 1.97 DIA.
DETAILS

FRANKFORD ARSENAL MAY 1, 1940

SUBMITTED
CAPT. ORD. DEPT., U. S. A.

APPROVED
ORD. DEPT., U. S. A.

DRAFTSMAN	TRACER	VICE-PRESIDENT
	H.J.G.	
CHECKER	CHECKER	CH'F DR'SMAN

FB17272

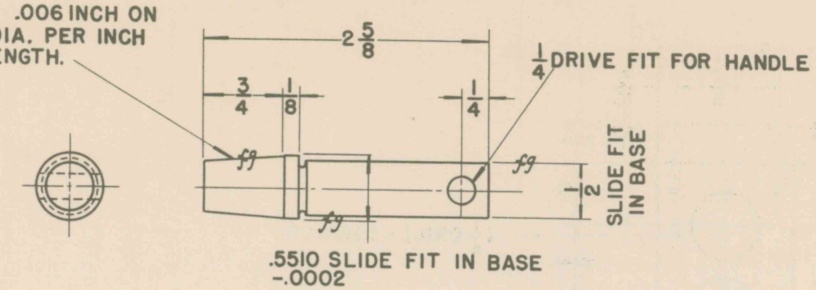

PLUG
TOOL STEEL
HARDEN

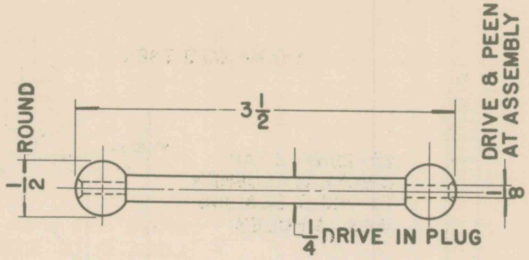

HANDLE
.25 DRILL ROD

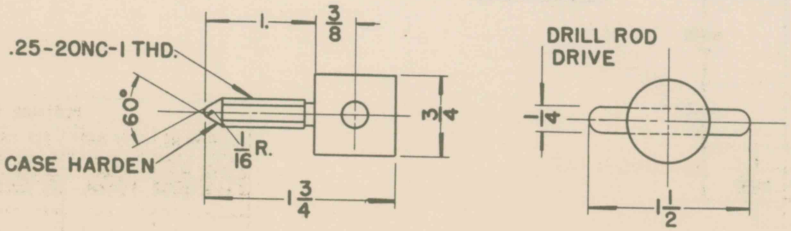

SCREW, THUMB
MACH. STEEL
CASE HARDEN

LAP fg SURFACES
REMOVE ALL SHARP EDGES

PERTAINS TO		
DRAWING NO.	PIECE MARK	REV. DATE
71-2-96	96A	4-18-40
71-2-100	100A	4-18-40

REVISIONS

CASE, CARTRIDGE, 37 MM., M16 & M17
GAGE FOR CONCENTRICITY
PRIMER HOLE WITH 1.97 DIA.
DETAILS

FRANKFORD ARSENAL MAY 1, 1940

SUBMITTED
CAPT. ORD. DEPT., U. S. A.
APPROVED
ORD. DEPT., U. S. A.

DRAFTSMAN
TRACER H.J.G.
DESIGNED BY
CHECKER
CHECKER
CH'F DR'SMAN

FB 17273

MARKING:-
37 MM. CARTRIDGE CASE M16 & M17
71-2-96 & 71-2-100 TOTAL LENGTH
WORK
FB 17274

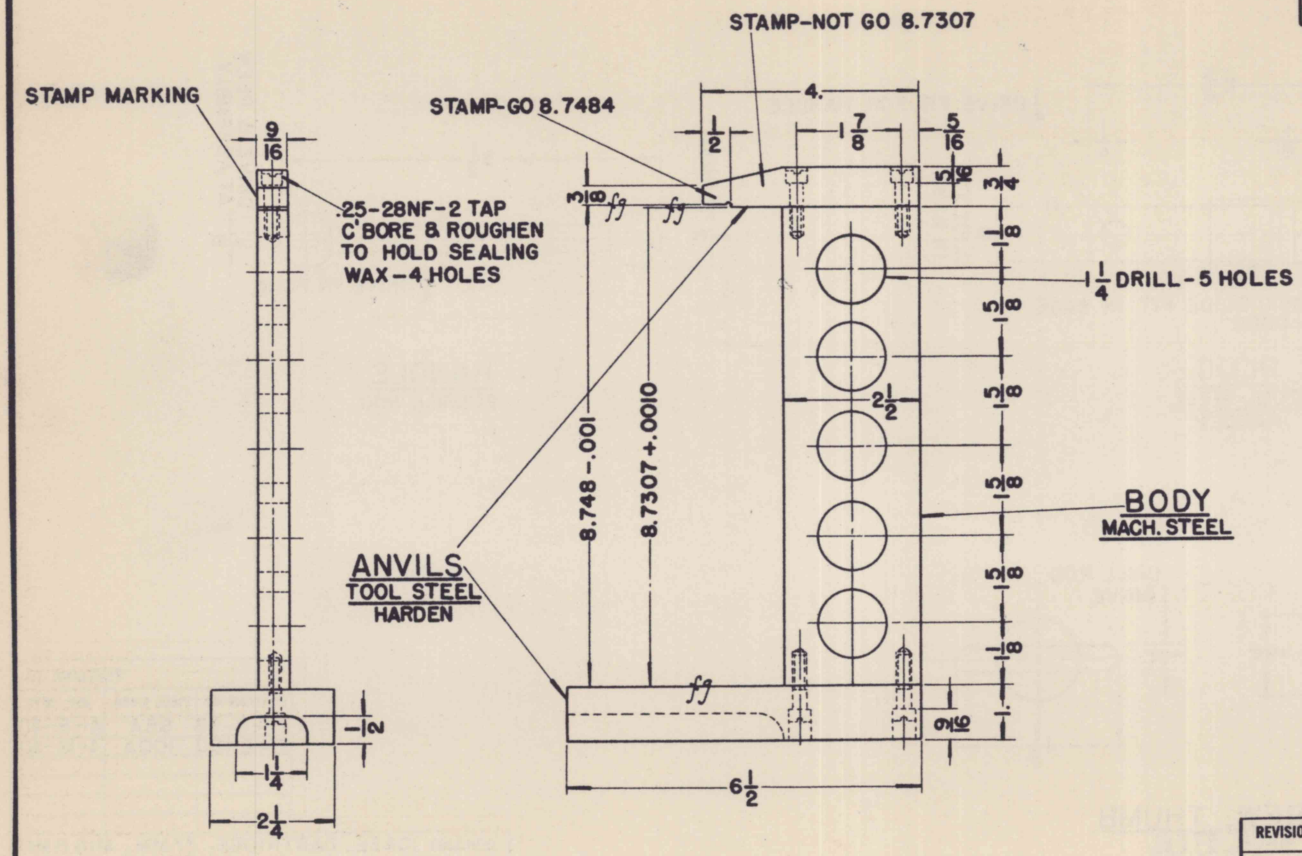

SNAP GAGE
4-SCREWS, FIL. HD., .25-28NF-2 X .875 LONG

LAP fg SURFACES
REMOVE ALL SHARP EDGES

PERTAINS TO		
DRAWING NO.	PIECE MARK	REV. DATE
71-2-96	96A	4-18-40
71-2-100	100A	4-18-40

REVISIONS	CASE, CARTRIDGE, 37 MM., M16 & M17 GAGE FOR TOTAL LENGTH			
	FRANKFORD ARSENAL MAY 1, 1940			
	SUBMITTED Zoe Capard CAPT. ORD. DEPT., U. S. A.	DRAFTSMAN	TRACER H.J.G.	LINE OF FIRE MAN
		CHECKER	CHECKER	CH'F OF SHOP
	APPROVED ORD. DEPT., U. S. A.	FB 17274		

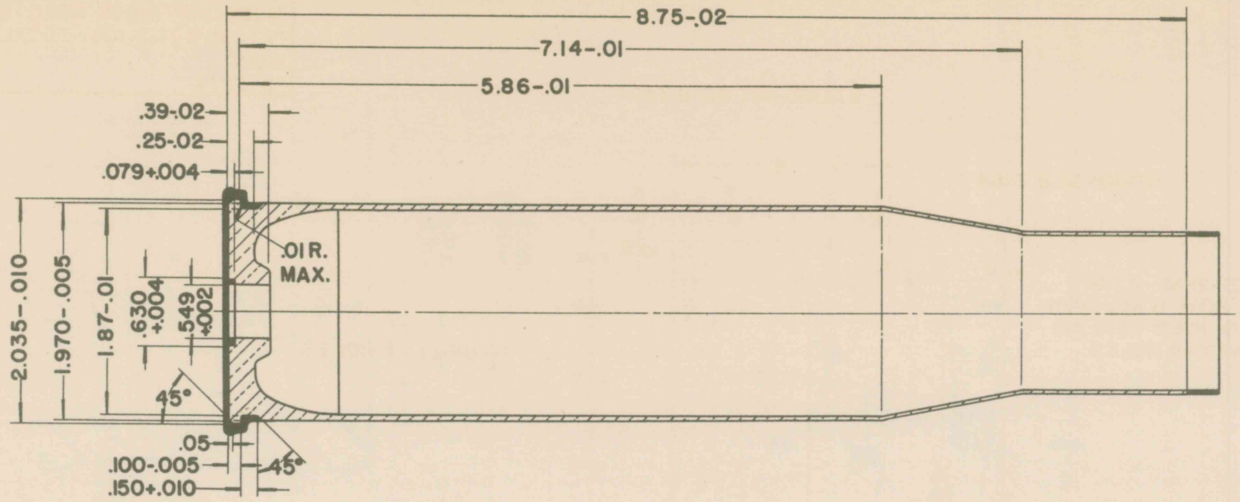

OPERATION NO. 17A

This operation for the M17 Case is performed in the same manner as Operation No. 17 for the M16 Case the only difference being the form tool.

PERTAINS TO		
DRAWING NO.	PIECE MARK	REV. DATE
71-2-100	100A	4-18-40

R-271-1P

REVISIONS	CASE, CARTRIDGE, 37 MM., M17 OPERATION:- FINISH MACHINE HEAD & TRIM TO LENGTH FRANKFORD ARSENAL MAY 1, 1940			
	SUBMITTED 70 C Aymp CAPT. ORD. DEPT., U. S. A.	DRAFTSMAN H.J.G. CHECKER	TRACER H.J.G. CHECKER	L'DRG DR'SMAN O.R.G. CH'F DR'SMAN
	APPROVED ORD. DEPT., U. S. A.	FB17275		

STAMP:-FB17276

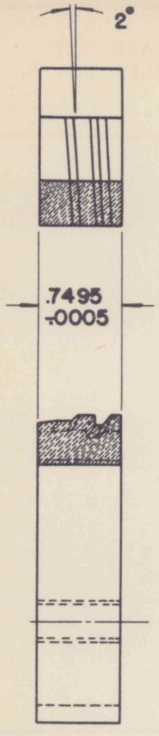

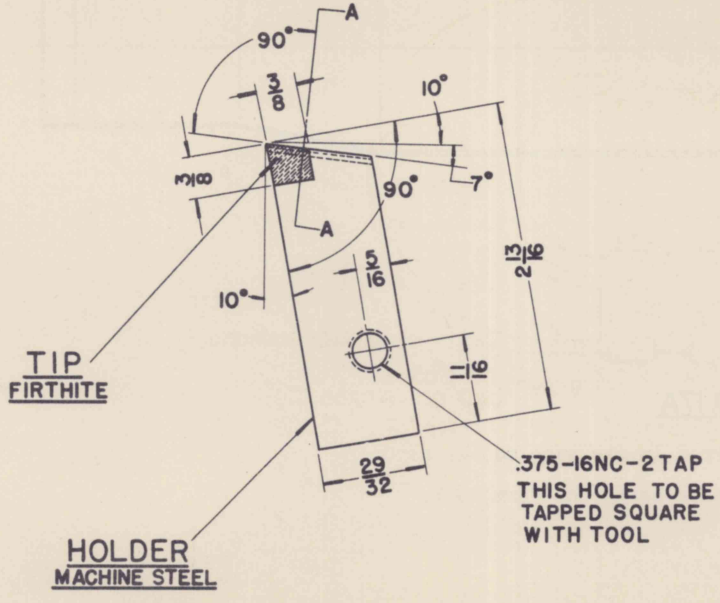

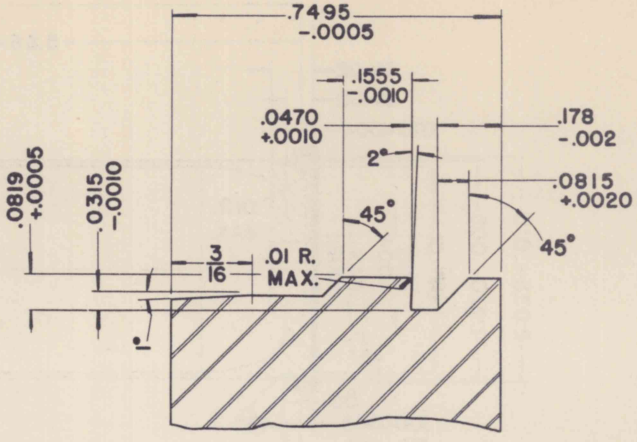

ENLARGED VIEW

DIMENSIONS TAKEN THRU A-A

PERTAINS TO		
DRAWING NO.	PIECE MARK	REV. DATE
71-2-100	100A	4-18-40

R-271-30A

TOOL, FORMING

NOTE:-
HOLDER HAS SETUP ANGLE OF 10° GIVING TOOL 10° RAKE AND 7° CLEARANCE

REVISIONS	CASE, CARTRIDGE 37 MM., M17 OPERATION:-FINISH MACHINE HEAD & TRIM TO LENGTH FRANKFORD ARSENAL MAY 1, 1940			
	SUBMITTED J. C. Aspd CAPT. ORD. DEPT., U. S. A.	DRAFTSMAN	TRACER H.J.G.	LDG DR'SMAN A.K.D.
		CHECKER	CHECKER	CH'F DR'SMAN
	APPROVED ORD. DEPT., U. S. A.	FB17276		

MARKING:-
37 MM. CARTRIDGE CASE, M17
71-2-100-DIA. FLANGE
WORK
FB 17277

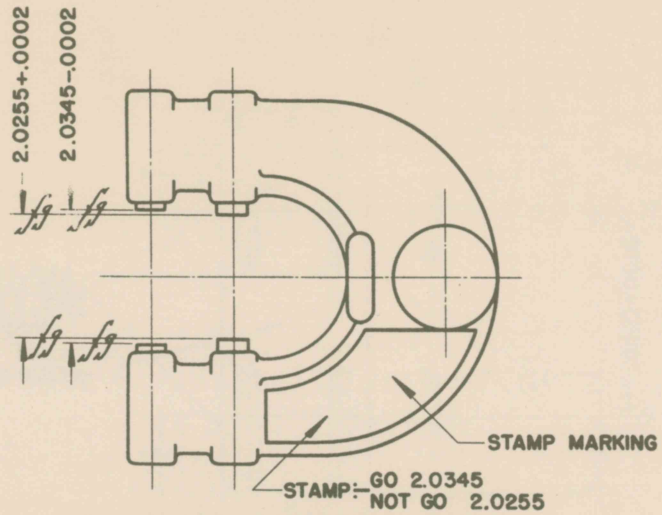

ADJUSTABLE SNAP GAGE
COMMERCIAL

PERTAINS TO		
DRAWING NO.	PIECE MARK	REV. DATE
71-2-100	100A	4-18-40

REVISIONS	CASE, CARTRIDGE, 37 MM., M17 GAGE FOR DIA. FLANGE			
	FRANKFORD ARSENAL MAY 1, 1940			
	SUBMITTED CAPT. ORD. DEPT., U. S. A.	DRAFTSMAN H.J.G.	DATE H.J.G.	LEAD DRAFTSMAN
		CHECKER	CHECKER	CH. F. DR. SMAN
	APPROVED ORD. DEPT., U. S. A.	FB17277		

MARKING
37MM. CARTRIDGE CASE M17
71-2-100 DIA. EXTRACTOR GROOVE
WORK
FB 17278

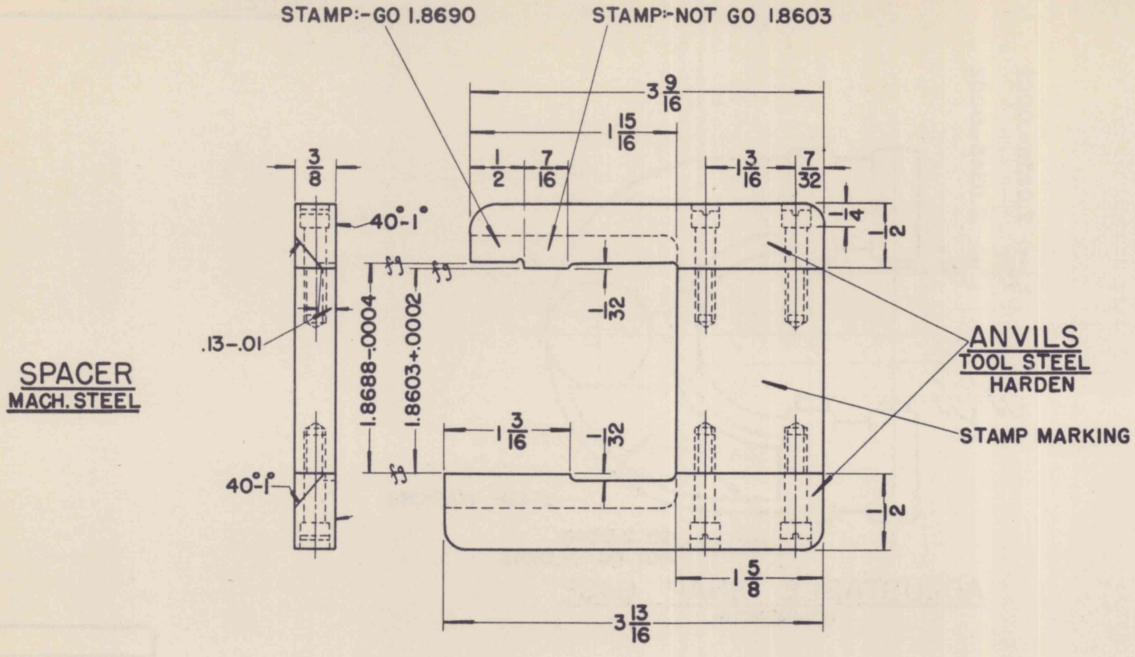

SNAP GAGE

4-SCREWS, FIL. HD., .164-36NF-2x.75 LONG

PERTAINS TO		
DRAWING NO.	PIECE MARK	REV. DATE
71-2-100	100A	4-18-40

REVISIONS	CASE, CARTRIDGE, 37 MM., M17 GAGE FOR DIA. EXTRACTOR GROOVE			
	FRANKFORD ARSENAL MAY 1, 1940			
	SUBMITTED CAPT. ORD. DEPT., U. S. A.	DRAFTSMAN H.J.G.	TRACER H.J.G.	LAYOUT DRAFTSMAN
		CHECKER	CHECKER	CH'F DR'SMAN
	APPROVED ORD. DEPT., U. S. A.	FB17278		

LAP fg SURFACES
REMOVE ALL SHARP EDGES

MARKING
37MM. CARTRIDGE CASE M17
71-2-100 WIDTH EXTRACTOR GROOVE
WORK
FB 17279

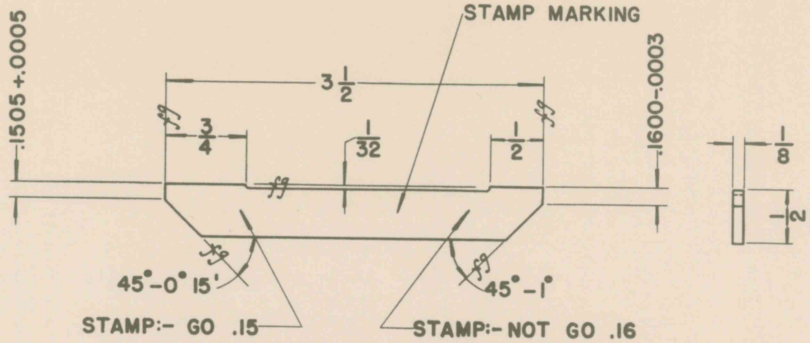

TEMPLATE GAGE
TOOL STEEL
HARDEN

PERTAINS TO		
DRAWING NO.	PIECE MARK	REV. DATE
71-2-100	100A	4-18-40

LAP fg SURFACES
REMOVE ALL SHARP EDGES

REVISIONS	CASE, CARTRIDGE, 37MM., M17 GAGE FOR WIDTH EXTRACTOR GROOVE			
	FRANKFORD ARSENAL MAY 1, 1940			
	SUBMITTED F.O.C. Alford CAPT. ORD. DEPT., U. S. A.	DRAFTSMAN	TRACER H. J. G.	CHIEF DRAFTSMAN
		CHECKER	CHECKER	CH'F DR'SMAN
	APPROVED ORD. DEPT., U. S. A.	FB 17279		

FINAL INSPECTION, STAMPING & PACKING
37 M.M. CARTRIDGE CASE

OPERATION NO.'S 18 TO 21 INCL.

After the Case has been finish machined it is washed to remove the accumulation of grease and chips from the previous operations. The mouth is annealed in the same manner as that described for annealing before taper. After which it is washed to remove the saltpeter.

The Cases are given a low temperature stress relief treatment to remove the strains set up from cold working and prevent season cracking. The temperature is below that of recrystallization, therefore, the physical qualities are not changed. A furnace of the continuous type is used and held at 500° F. The time required for the Case to pass through the furnace is one hour.

After cooling the Cases are inspected by the government inspectors and all Cases passing this inspection are then stamped with the marking as shown on the drawing. Frankford Arsenal uses a special stamping machine manufactured by Noble and Westbrook with a ram actuated by the use of heavy springs. A light hydraulic press or drop hammer could be used satisfactorily. After stamping they are packed in cardboard cartons for shipment.

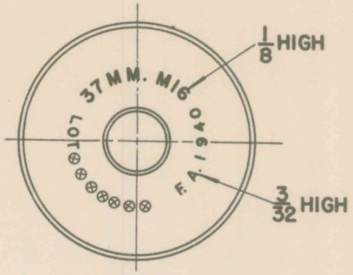

PERTAINS TO		
DRAWING NO.	PIECE MARK	REV. DATE
71-2-96	96A	4-18-40
71-2-100	100A	4-18-40

REVISIONS

CASE, CARTRIDGE, 37 MM., M16 & M17
OPERATION:-
STAMP

FRANKFORD ARSENAL MAY 1, 1940

SUBMITTED F.O.C. Alyard CAPT. ORD. DEPT., U. S. A.
APPROVED ORD. DEPT., U. S. A.

DRAFTSMAN H. J. G. CHECKER
TRACER H. J. G. CHECKER
LINE DRAFTSMAN W. K. S. CH'F DR'SMAN

FB17280

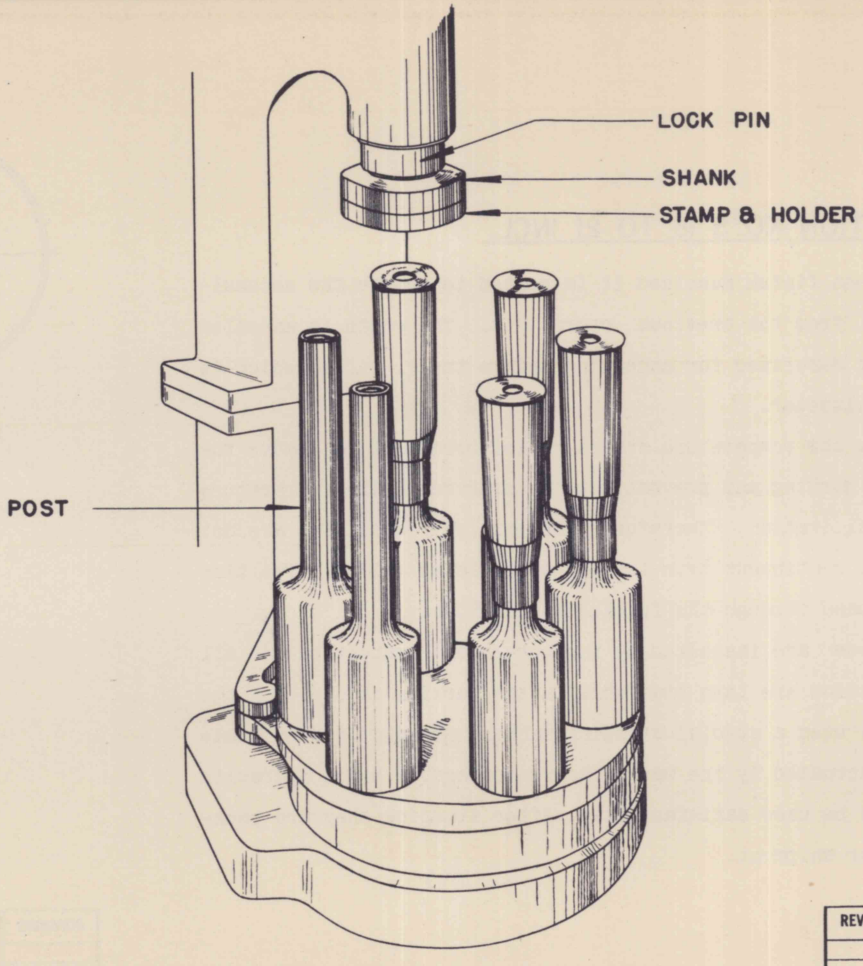

SETUP SKETCH

PERTAINS TO		
DRAWING NO.	PIECE MARK	REV. DATE
71-2-96	96A	4-18-40
71-2-100	100A	4-18-40

REVISIONS	CASE, CARTRIDGE, 37 MM., M16 & M17 OPERATION:- STAMPING			
	FRANKFORD ARSENAL MAY 1, 1940			
	SUBMITTED CAPT. ORD. DEPT., U. S. A.	DRAFTSMAN CHECKER	TRACER CHECKER	FOREMAN CH'F DR'SMAN
	APPROVED ORD. DEPT., U. S. A.	FB17281		

STAMP:-FB 17282

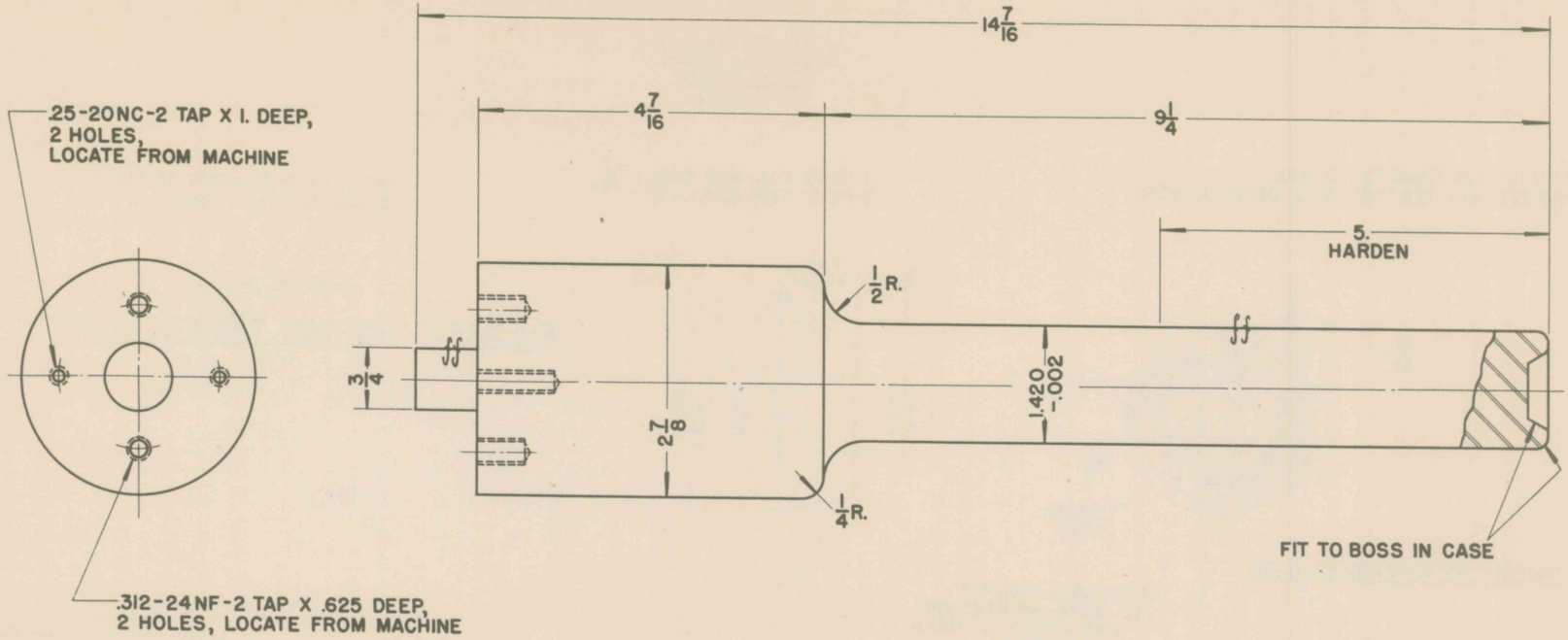

POST
SIX-TOOL STEEL
HARDEN END

PERTAINS TO		
DRAWING NO.	PIECE MARK	REV. DATE
71-2-96	96A	4-18-40
71-2-100	100A	4-18-40

R-271-40

REVISIONS

CASE, CARTRIDGE, 37 M.M., M16 & M17
OPERATION:-STAMPING

FRANKFORD ARSENAL MAY 1, 1940

SUBMITTED
CAPT. ORD. DEPT., U. S. A.

APPROVED
ORD. DEPT., U. S. A.

DRAFTSMAN	TRACER	LINE OR FOREMAN
	RJ	OK. R.O.K.
CHECKER	CHECKER	CH'F OR SMAN

FB17282

STAMP:-FB 17283

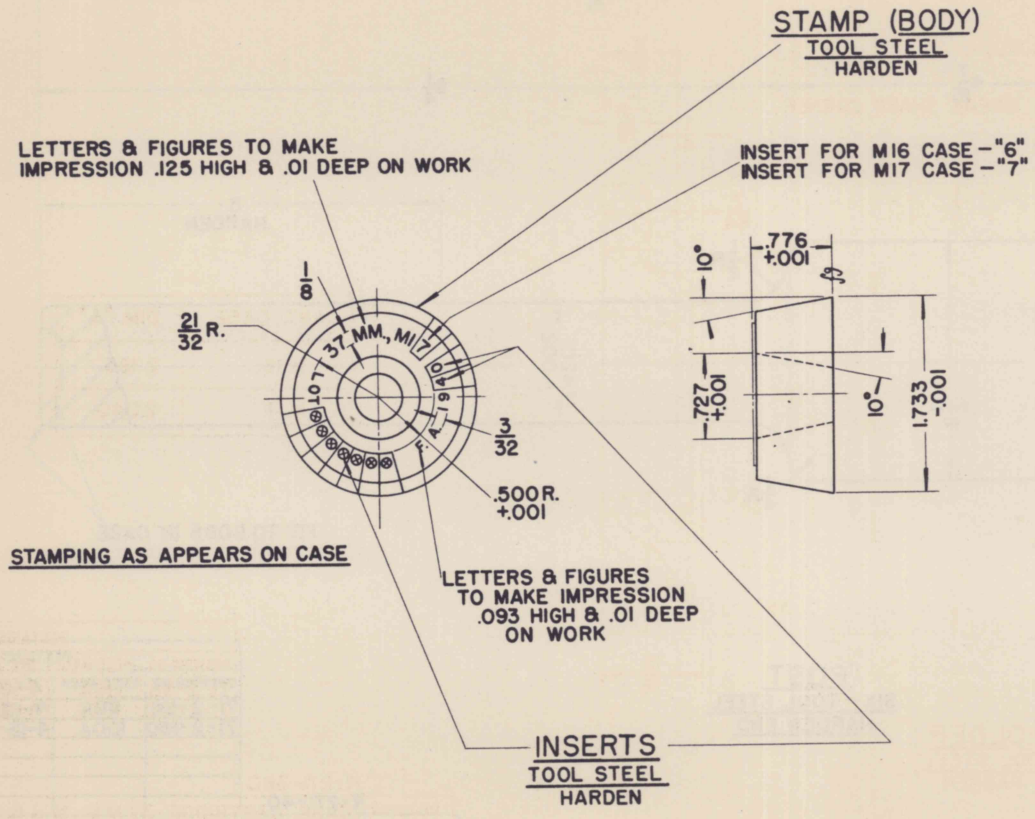

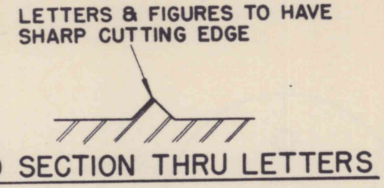

NOTE:-
MAKE ALL INSERTS SAME SIZE OVERALL
SPACES MARKED ⊗ TO BE CHANGEABLE INSERTS

PERTAINS TO		
DRAWING NO.	PIECE MARK	REV. DATE
71-2-96	96A	4-18-40
71-2-100	100A	4-18-40

R-271-38A

REVISIONS

CASE, CARTRIDGE, 37 M.M., M16 & M17
OPERATION:- STAMPING

FRANKFORD ARSENAL MAY 1, 1940

SUBMITTED
Joe Alford
CAPT. ORD. DEPT., U. S. A.

APPROVED
ORD. DEPT., U. S. A.

DRAFTSMAN	TRACER	LAY-OUTSMAN
CHECKER	CHECKER	CH'T DR'SMAN

FB17283

STAMP:-FB17284

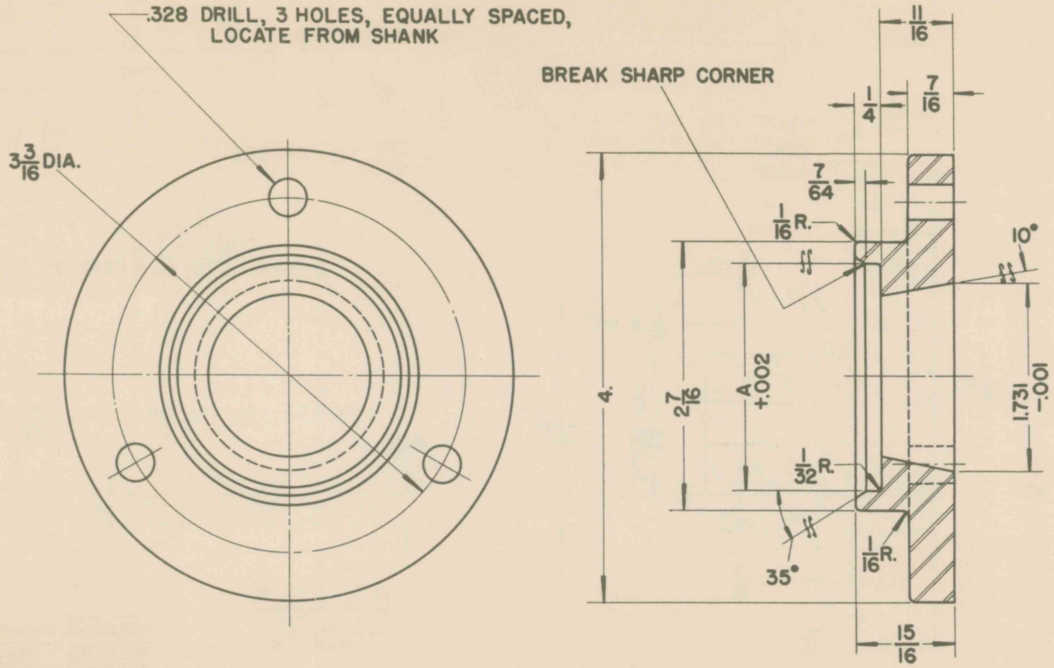

CART. CASE	DIM. "A"
M 16	2.195
M 17	2.040

HOLDER
TOOL STEEL
HARDEN

PERTAINS TO		
DRAWING NO.	PIECE MARK	REV. DATE
71-2-96	96A	4-18-40
71-2-100	100A	4-18-40

R-271-38C

REVISIONS

CASE, CARTRIDGE, 37 M.M., M16 & M17
OPERATION:-STAMPING

FRANKFORD ARSENAL MAY 1, 1940

SUBMITTED
CAPT. ORD. DEPT., U. S. A.

APPROVED
ORD. DEPT., U. S. A.

DRAFTSMAN | TRACER | LATE DRAFTSMAN
CHECKER | CHECKER | CH'F. DR. SADM.

FB17284

STAMP:- FB 17285

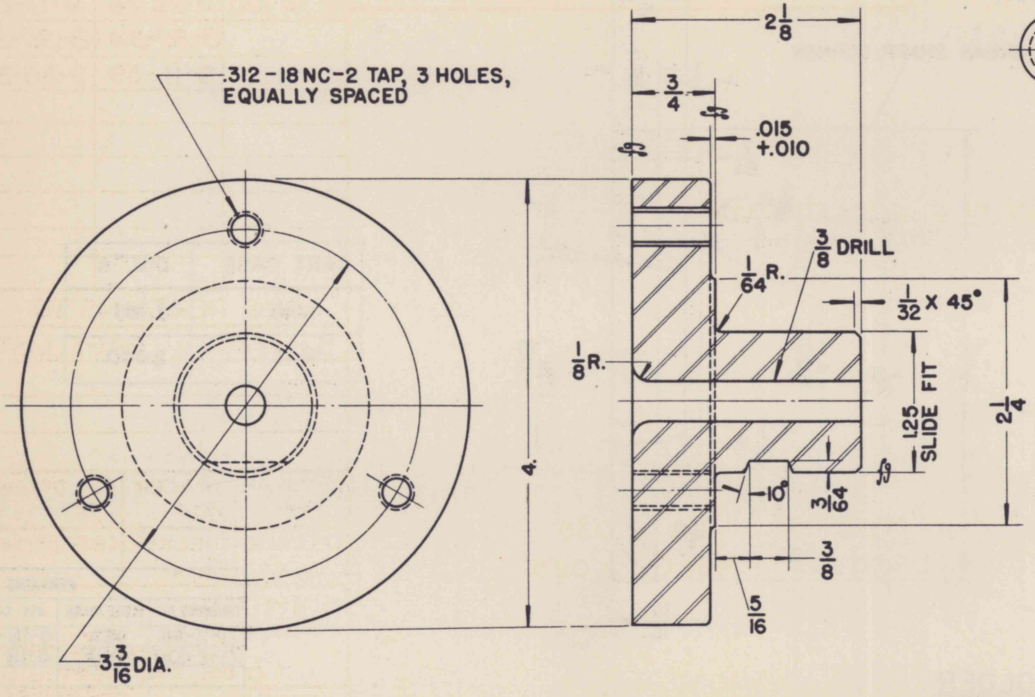

SHANK
TOOL STEEL
HARDEN

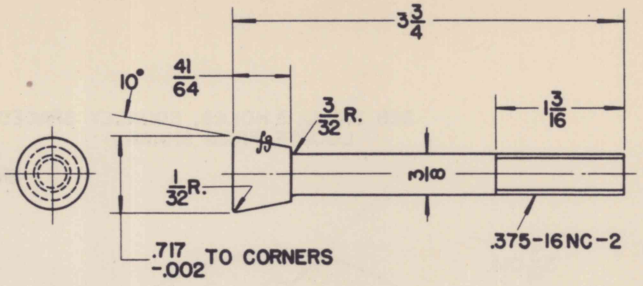

PILOT
TOOL STEEL
2-HEX. NUTS, .375-16 NC-2

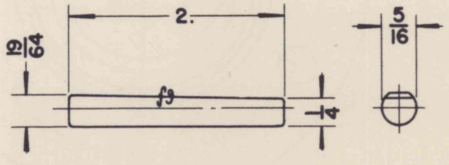

PIN, LOCK
DRILL ROD
HARDEN

PERTAINS TO		
DRAWING NO.	PIECE MARK	REV. DATE
71-2-96	96A	4-18-40
71-2-100	100A	4-18-40

R-271-38D

REVISIONS

CASE, CARTRIDGE, 37 M.M., M16 & M17
OPERATION:- STAMPING

FRANKFORD ARSENAL MAY 1, 1940

SUBMITTED
CAPT. ORD. DEPT., U. S. A.

APPROVED
ORD. DEPT., U. S. A.

DRAFTSMAN	TRACER	LOCO DR'MAN
RJ		
CHECKER	CHECKER	CH'F DR'SMAN

FB17285

MARKING:- 37 M.M. CART. CASE,
M17, 71 -2-100, DIA. FLANGE, INSP.

A52351 , ORD. DEPT. U.S.A.

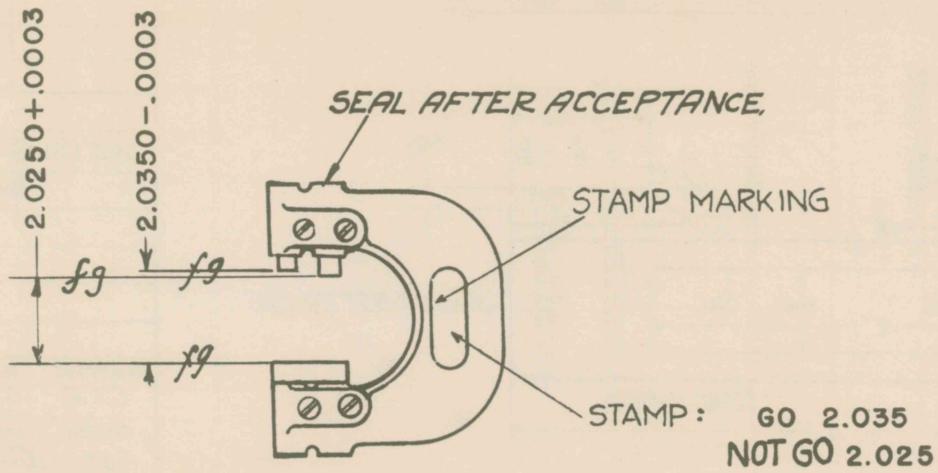

ADJUSTABLE SNAP GAGE

AMERICAN GAGE DESIGN STANDARD
MODEL A.

ROCKWELL C63 TO 66
LAP fg SURFACES
REMOVE ALL SHARP EDGES

REVISIONS

COMPONENT		GAGE
DRG. NO.	DATE	DATE
71 -2-100	3-26-26	6-11-28
	9-30-34	8-30-34
	9-11-39	9-30-39

DRG. PERTAINS TO
B111721 GAGE LISTS

D'FTSMAN	TRACER	L'D'G. D'FTSMAN
BP	BP	BP
CHECKER	CHECKER	CHIEF D'FTSMAN
H.G.S.	Emil	

SUBMITTED:-
LT. COL., ORD. DEPT. U.S.A.
COMMANDING

APPROVED:-
J. O. Johnson
CHIEF GAGE SEC. ORD. DEPT. U.S.A.

FRANKFORD ARSENAL

DATE JUNE 11, 1928

A52351

MARKING:- 37 M.M. CART. CASE,
M17 & M16, 71 -2-100 & 71-2-96,
THICKNESS FLANGE, INSP.
A-52352 ORD. DEP'T. U. S. A.

FOR .164 FIL. HD. SCREW
SEAL AFTER ACCEPTANCE

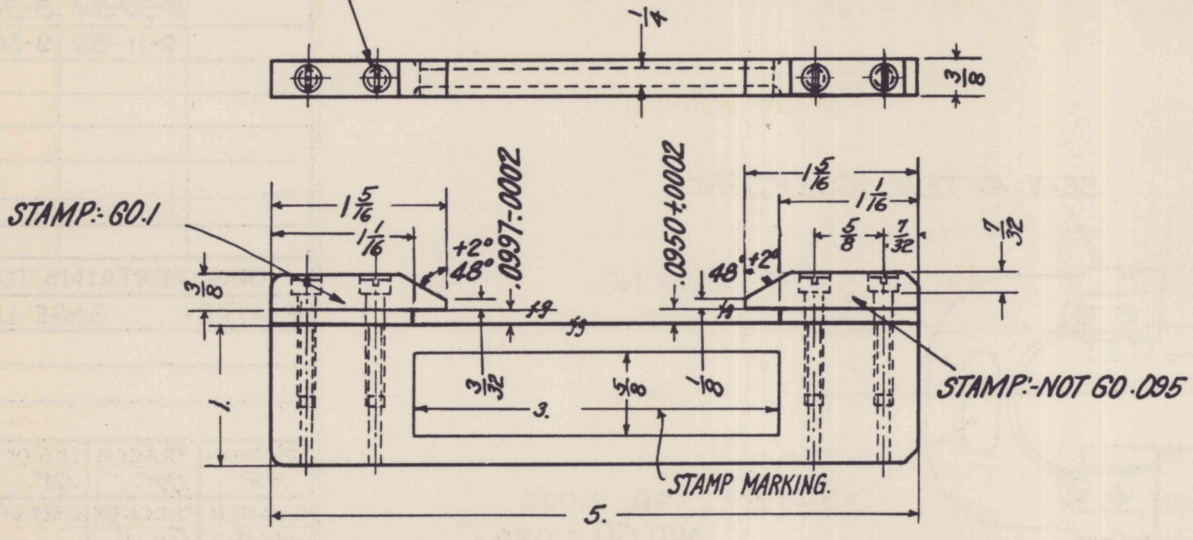

SNAP GAGE.
TOOL STEEL.
FINISH f ± .01 - HARDEN.
4-.164-36NF-2 x 3/4 FIL. HD. SCREWS.

LAP "f9" SURFACES.
ROCKWELL HARDNESS C63 TO 66
REMOVE ALL SHARP EDGES

REVISIONS

COMPONENT		GAGE
DRAWING NO.	DATE	DATE
71E-2-100	~~3-26-26~~	6-11-28
71-2-100	9-11-39	
71-2-96	8-3-39	9-30-39

GAGE LIST B-111721
B-112908

DRAFTSMAN	TRACER	L'D'G DRAFTSMAN
C.L.C.	C.L.C.	BP
CHECKER	CHECKER	CHIEF DRAFTSMAN
H.E.S.	Emil.	

SUBMITTED:-
LT. COL. ORD. DEPT., U. S. A.
APPROVED:- COMMANDING.
J. O. Johnson
CHIEF GAGE SECTION ORD. DEPT., U. S. A.
FRANKFORD ARSENAL
DATE JUNE 11, 1926

A-52352.

MARKING:- 37 MM. CART. CASE, M 17,
71-2-100,
WIDTH EXTRACTOR GROOVE, INSP.
A 52353 , ORD, DEPT., U. S. A.

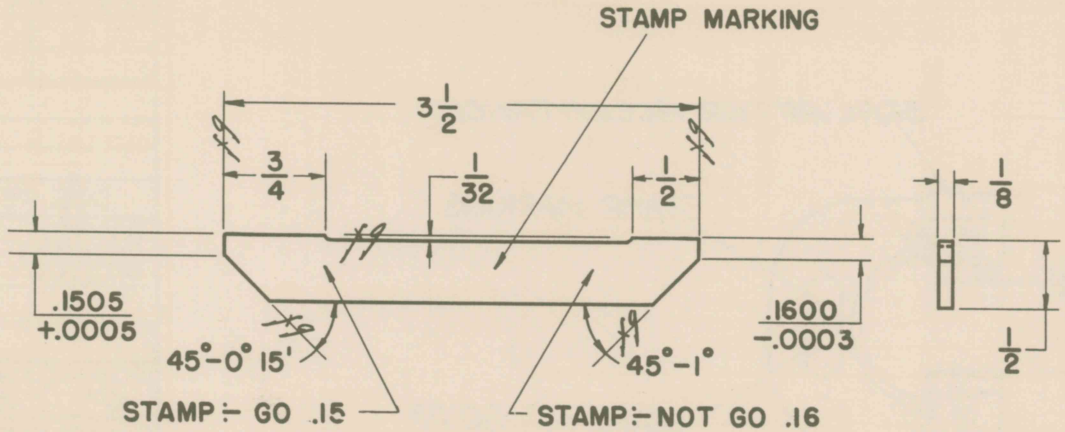

TEMPLATE GAGE

TOOL STEEL

FINISH ✓ - HARDEN

SUPERSEDES A52353,
REV. DATE:- 9-30-39

ROCKWELL HARDNESS C63 TO 66.
LAP fg SURFACES
REMOVE ALL SHARP EDGES

REVISIONS		
COMPONENT		GAGE
DRAWING NO.	DATE	DATE
71-2-100	9-11-39	9-30-39

DRAWING PERTAINS TO

B 111721 GAGE LISTS

DRAFTSMAN	TRACER	L'D'G DRAFTSMAN
W. F.	W. F.	
CHECKER	CHECKER	CHIEF DRAFTSMAN

SUBMITTED:-

CAPT., ORD. DEPT., U. S. A.

APPROVED BY ORDER OF THE CHIEF OF ORDNANCE

MAJ., ORD. DEPT., U. S. A.

FRANKFORD ARSENAL

DATE JUNE 11, 1928.

A52353

MARKING:- 37 M.M. CART. CASE, M17 & M16, 71-2-100 & 71-2-96, THICKNESS WALL AT MOUTH, INSP.

A52355 , ORD. DEPT. U.S.A.

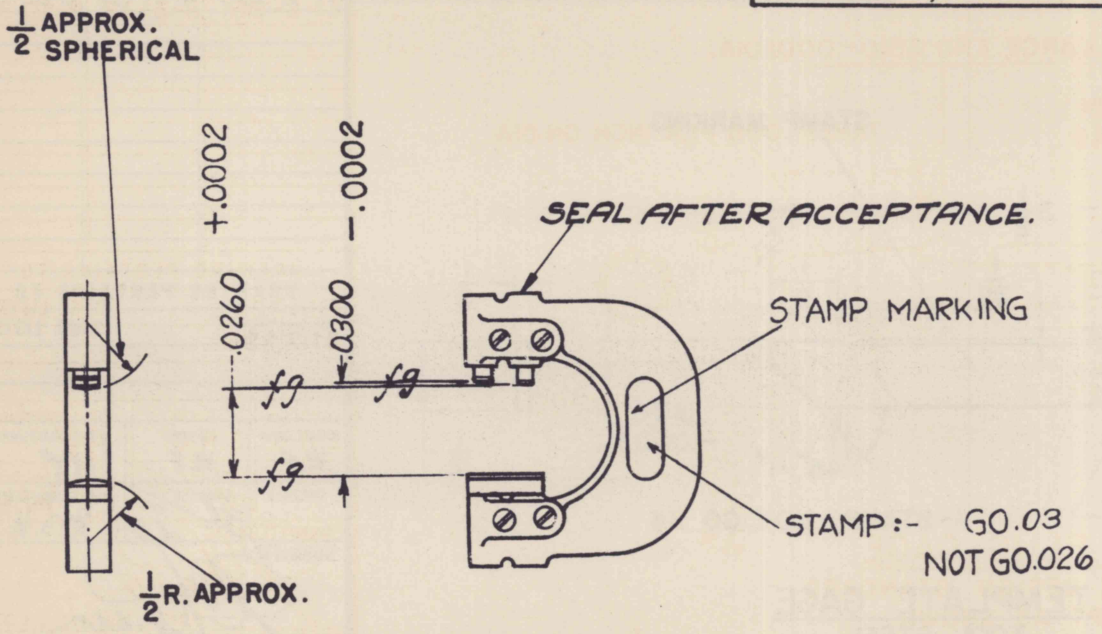

ADJUSTABLE SNAP GAGE

AMERICAN GAGE DESIGN STANDARD
MODEL MC

ROCKWELL HARDNESS C63 TO 66
LAPX9 SURFACES
REMOVE ALL SHARP EDGES

REVISIONS		
COMPONENT		GAGE
DRG. NO.	DATE	DATE
~~71E-2-100~~	~~3-26-26~~	6-11-28
	~~3-30-34~~	~~8-30-34~~
71-2-100	9-11-39	
71-2-96	8-3-39	9-30-39

DRG. PERTAINS TO
B111721 GAGE LISTS
B112908

D'FTSMAN	TRACER	L'D'G. D'FTSMAN
PP	PP	PP
CHECKER	CHECKER	CHIEF D'FTSMAN
H.G.S	CMW	S.J.

SUBMITTED:-
LT. COL., ORD. DEPT. U.S.A.

APPROVED:- COMMANDING
J. O. Johnson
CHIEF GAGE SEC. ORD. DEPT. U.S.A.

FRANKFORD ARSENAL

DATE JUNE 11, 1928

A 52355

MARKING:– 37 M.M. CART. CASE,
M17 & M16, 71 -2-100 & 71-2-96,
DIA. PRIMER HOLE, INSP.,
A52356 , ORD, DEPT., U. S. A.

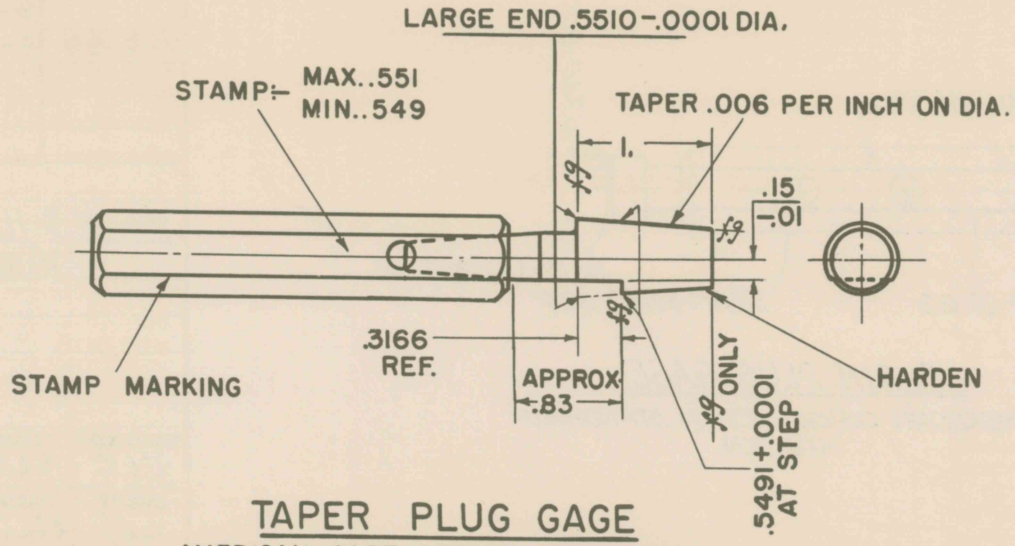

TAPER PLUG GAGE

AMERICAN GAGE DESIGN STANDARD
EXCEPT AS SHOWN

ROCKWELL HARDNESS C 63 TO 66
LAP *fg* SURFACES
REMOVE ALL SHARP EDGES

SUPERSEDES A52356 UNDER REV. DATE 9-30-39

REVISIONS

COMPONENT		GAGE
DRAWING NO.	DATE	DATE
71 -2-100	9-11-39	
71-2-96	8-3-39	9-30-39

DRAWING PERTAINS TO

B111721 GAGE LISTS
B112908

DRAFTSMAN	TRACER	L'D'G DRAFTSMAN
E.R.G.	E.R.G.	
CHECKER	CHECKER	CHIEF DRAFTSMAN
	C.D.H.	

SUBMITTED:
CAPT. ORD. DEPT., U. S. A.

APPROVED BY ORDER OF THE
CHIEF OF ORDNANCE
MAJ. ORD. DEPT., U. S. A.

FRANKFORD ARSENAL

DATE JUNE 11, 1928.

A52356

MARKING:- 37 M.M. CART. CASE,
M17 & M16, 71-2-100 & 71-2-96,
DIA. PRIMER HOLE C'BORE, INSP.

A52357 ORD. DEP'T. U. S. A.

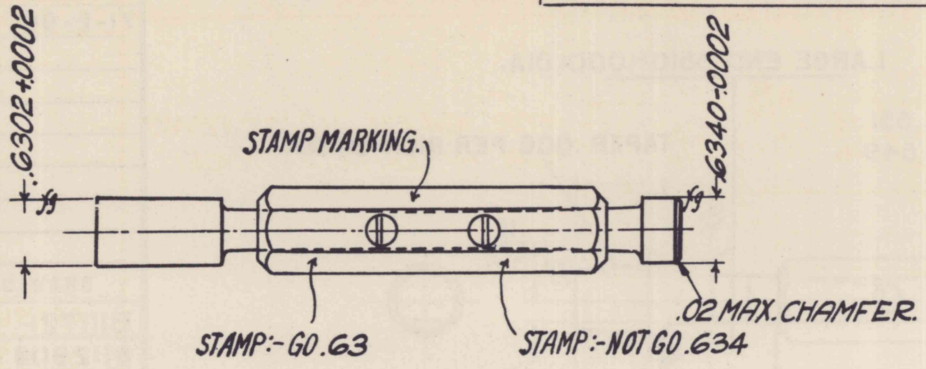

PLAIN PLUG GAGE.

AMERICAN GAGE DESIGN STANDARD.
HARDEN.

ROCKWELL HARDNESS C63 TO 66
LAP fg SURFACES.
REMOVE ALL SHARP EDGES

REVISIONS

COMPONENT		GAGE
DRAWING NO.	DATE	DATE
71-2-100	~~3-26-26~~	6-11-28
	3-30-34	8-30-34
	9-11-39	
71-2-96	8-3-39	9-30-39

GAGE LIST B-111721
B112908

DRAFTSMAN	TRACER	L'D'G DRAFTSMAN
C.L.C	C.L.C.	[illegible]
CHECKER	CHECKER	CHIEF DRAFTSMAN
[illegible]	[illegible]	[illegible]

SUBMITTED:
LT.COL. ORD. DEPT., U. S. A.

APPROVED: COMMANDING.
J. O. Johnson
CHIEF GAGE SECTION ORD. DEPT., U. S. A.

FRANKFORD ARSENAL

DATE JUNE 11, 1928

A-52357.

MARKING:- 37M.M. CART. CASE, M17, 71 -2-100, DIA. EXTRACTOR GROOVE, INSP., A-52358, ORD. DEPT., U. S. A.

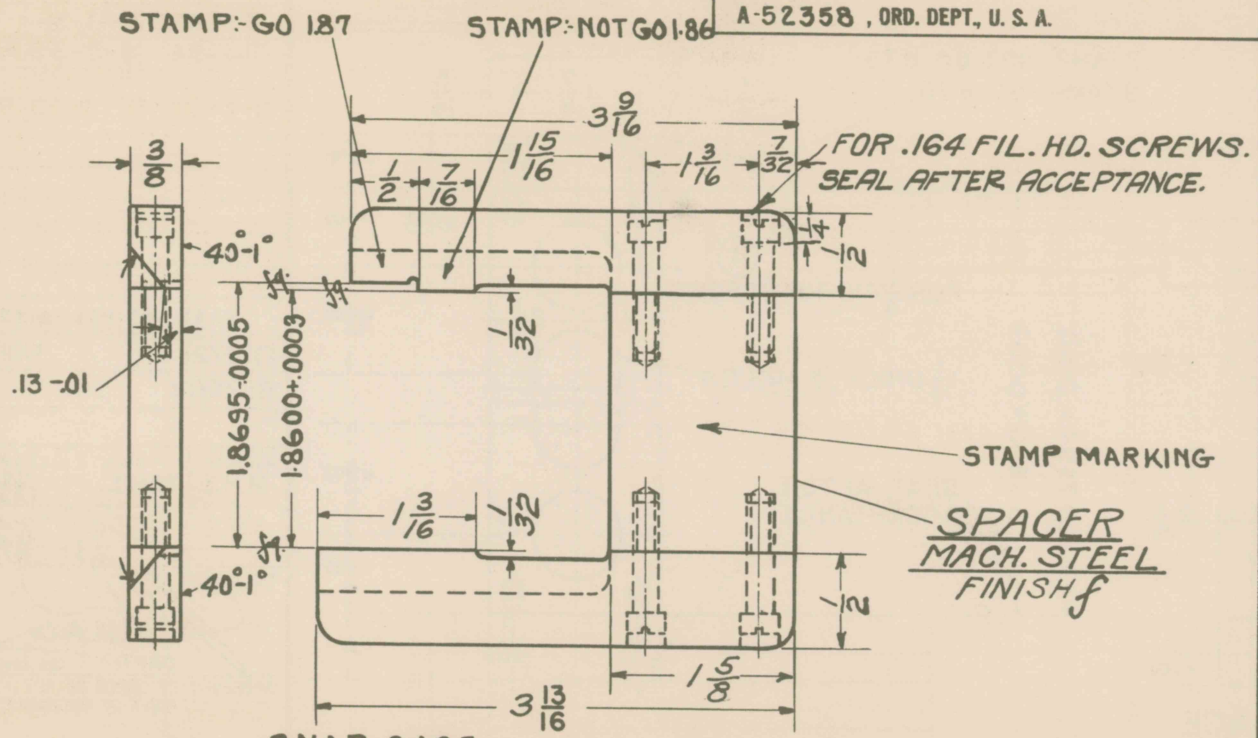

SNAP GAGE
TOOL STEEL (EXCEPT SPACER)
FINISH X-H'D'N.
4-.164-36NF2 × 3/4 FIL·H'D·SCREWS

ROCKWELL C63 TO 66
LAP f SURFACES
REMOVE ALL SHARP EDGES

REVISIONS

COMPONENT		GAGE
DRAWING NO.	DATE	DATE
71 -2-100	3-26-26	6-11-28
	3-30-34	8-30-34
	9-11-39	9-30-39

DRAWING PERTAINS TO
B-111721 GAGE LISTS

DRAFTSMAN	TRACER	L'D'G DRAFTSMAN
L.A.Y.	L.A.Y.	[illegible]
CHECKER	CHECKER	CHIEF DRAFTSMAN
[illegible]	[illegible]	[illegible]

SUBMITTED:-
[signature]
LT. COL. ORD. DEPT., U. S. A. COMMANDING

APPROVED:-
[signature]
CHIEF, GAGE SEC., ORD. DEPT., U. S. A.

FRANKFORD ARSENAL

DATE:- JUNE 11-1928

A-52358

MARKING:- 37 M.M. CART. CASE,
M17 & M16, 71-2-100 & 71-2-96,
TOTAL LENGTH, INSP.
A52359 , ORD. DEPT., U. S. A.

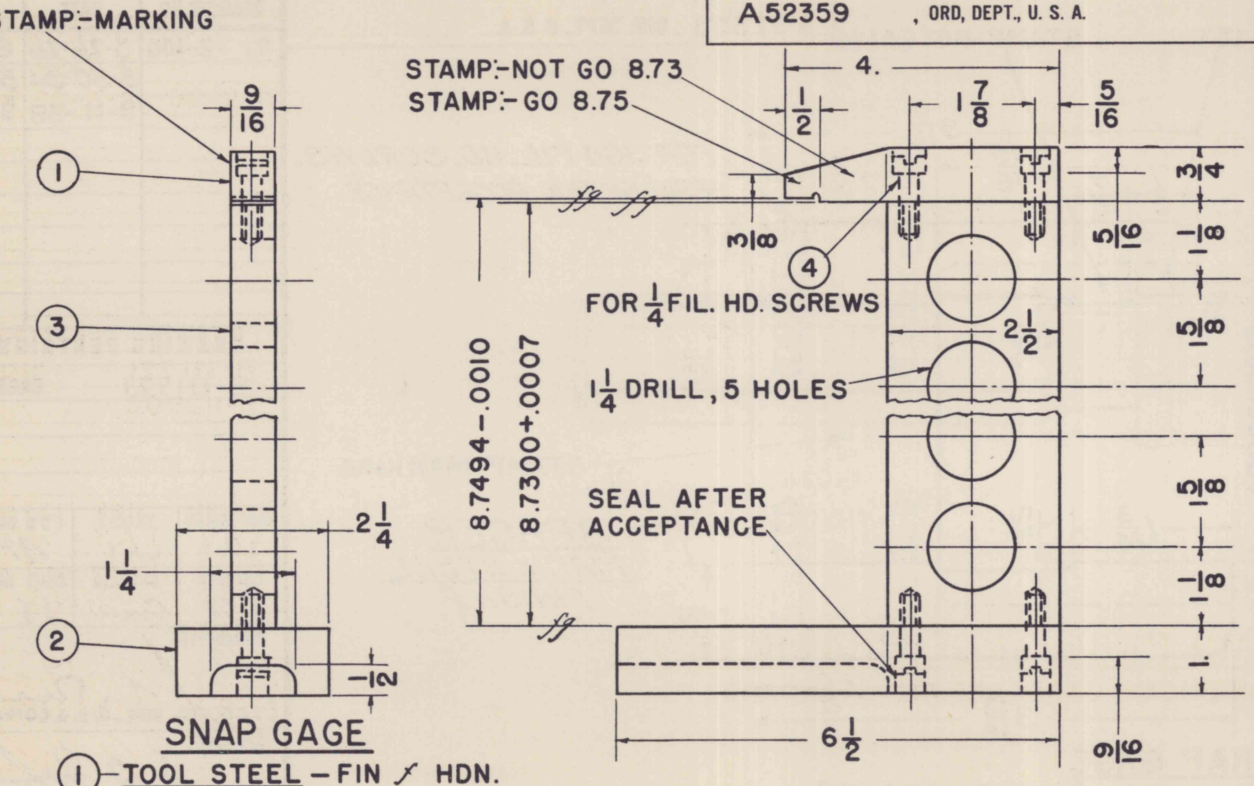

SNAP GAGE

1 — TOOL STEEL — FIN. ✓ HDN.
2 — TOOL STEEL — FIN. ✓ HDN.
3 — MACH. STEEL — FIN. ✓
4 — 4-1/4-28NF-2X7/8 FIL. HD. SCREWS

ROCKWELL HARDNESS C63 TO 66
LAP fg SURFACES
REMOVE ALL SHARP EDGES

SUPERSEDES A52359 REV. DATE 9-30-39

REVISIONS		
COMPONENT		GAGE
DRAWING NO.	DATE	DATE
71-2-100	9-11-39	
71-2-96	8-3-39	9-30-39

DRAWING PERTAINS TO
B111721 GAGE LISTS
B112908

DRAFTSMAN	TRACER	L'D'G DRAFTSMAN
M.H.E.	M.H.E.	[illegible]
CHECKER	CHECKER	CHIEF DRAFTSMAN
	C.D.H. / S.F.	H.B.H.

SUBMITTED:
CAPT. ORD. DEPT., U. S. A.

APPROVED BY ORDER OF THE CHIEF OF ORDNANCE
MAJOR ORD. DEPT., U. S. A.

FRANKFORD ARSENAL
DATE JUNE 11, 1928

A52359

MARKING:- 37 M.M. CART. CASE, M17 & M16, 71 -2-100 & 71-2-96, DIA. OF MOUTH, INSP.
A-52361 , ORD. DEPT., U. S. A.

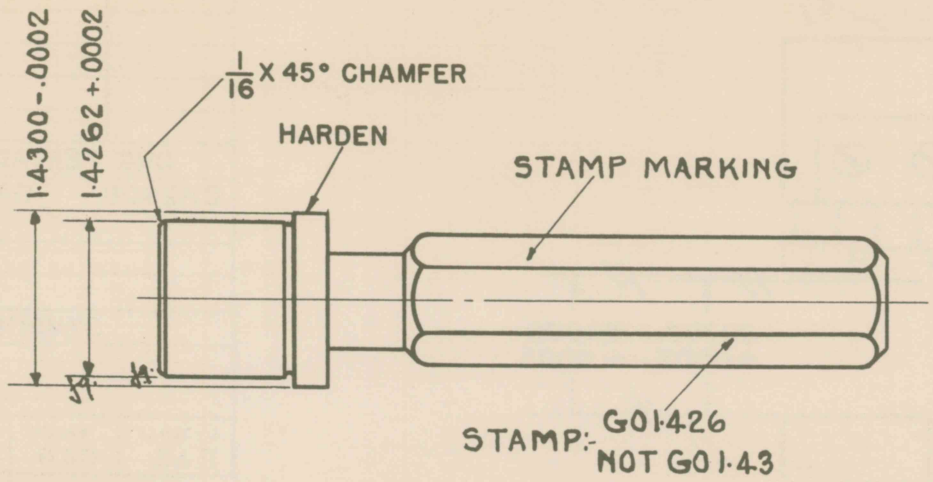

PLAIN PLUG GAGE (PROGRESSIVE)

AMERICAN GAGE DESIGN STANDARD

ROCKWELL HARDNESS C63-66
LAP Sq. SURFACES
REMOVE ALL SHARP EDGES

REVISIONS

COMPONENT		GAGE
DRAWING NO.	DATE	DATE
71 -2-100	3-26-26	6-11-28
	9-11-39	
71-2-96	8-3-39	9-30-39

DRAWING PERTAINS TO
B-111721 GAGE LISTS
B-112908

DRAFTSMAN	TRACER	L'D'G DRAFTSMAN
L.A.Y.	L.A.Y.	[illegible]
CHECKER	CHECKER	CHIEF DRAFTSMAN
[illegible]	[illegible]	[illegible]

SUBMITTED:-
[signature]
LT. COL. ORD. DEPT., U. S. A. COMMANDING

APPROVED:-
J. O. Johnson
CHIEF, GAGE SEC., ORD. DEPT., U. S. A.

FRANKFORD ARSENAL

DATE: JUNE-11-1928

A-52361

MARKING:–
37MM. CART. CASE M16, 71-2-96,
DIA. FLANGE, INSP.
A 52362 , ORD. DEPT. U.S.A.

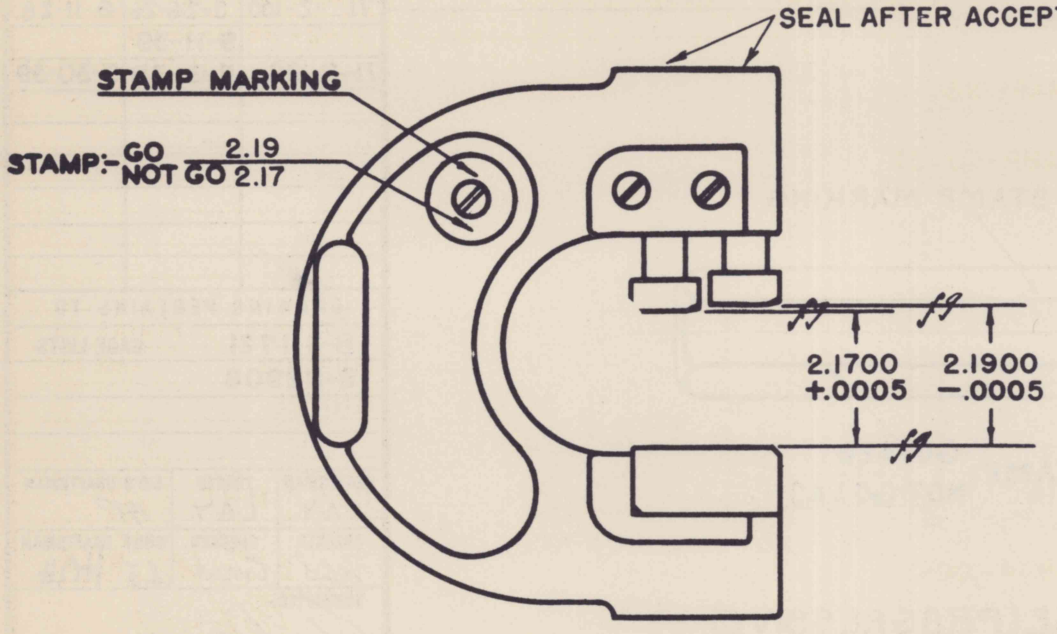

ADJUSTABLE SNAP GAGE.

AMERICAN GAGE DESIGN STANDARD
MODEL A

ROCKWELL C63 TO 66
LAP ✓9 SURFACES
REMOVE ALL SHARP EDGES

REVISIONS		
COMPONENT		GAGE
DRG. NO.	DATE	DATE
71-2-96	8-3-39	9-30-39

DRG. PERTAINS TO
B112908 GAGE LISTS

SYMBOL

D'FTSMAN	TRACER	L'D'G. D'FTSMAN
P.J.G.	P.J.G.	
CHECKER	CHECKER	CHIEF D'FTSMAN

SUBMITTED
CAPT. ORD. DEPT. U.S.A.

APPROVED BY ORDER OF THE
CHIEF OF ORDNANCE
MAJ. ORD. DEPT. U.S.A.

FRANKFORD ARSENAL

DATE SEPT. 30, 1939.

A 52362

SURFACES X-X & Y-Y
MUST BE IN LINE.

MARKING:- 37MM. CART. CASE M16, & M17,
71-2-96, & 71-2-100,
LENGTH PRIMER BOSS, INSP.
A 52363 , ORD, DEPT., U. S. A.

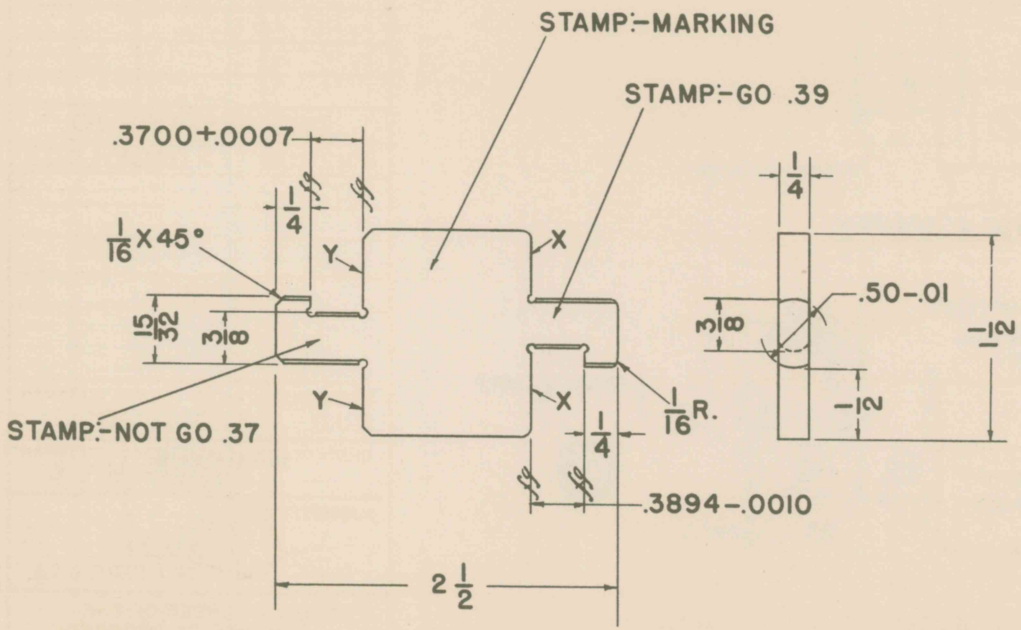

SNAP GAGE

TOOL STEEL
FINISH ✓ HDN.

ROCKWELL HARDNESS C63 TO 66
LAP fg SURFACES
REMOVE ALL SHARP EDGES

REVISIONS		
COMPONENT		GAGE
DRAWING NO.	DATE	DATE
71-2-96	8-3-39	
71-2-100	9-11-39	9-30-39

DRAWING PERTAINS TO
B112908 GAGE LISTS
B111721

DRAFTSMAN	TRACER	L'D'G DRAFTSMAN
P.J.G.	M.H.E.	
CHECKER	CHECKER	CHIEF DRAFTSMAN

SUBMITTED:
CAPT. ORD. DEPT., U. S. A.

APPROVED BY ORDER OF THE CHIEF OF ORDNANCE
MAJOR ORD. DEPT., U. S. A.

FRANKFORD ARSENAL

DATE SEPT. 30, 1939

A 52363

NOTE:-PIN TO BE FLUSH WITH STEPS FOR MAX. & MIN. POSITIONS & TO SLIDE FREELY WITHOUT SIDE PLAY.

MARKING:-37 M.M. CART. CASE M17 & M16, 71-2-100 & 71-2-96, DEPTH PRIMER HOLE C'BORE, INSP. B21725 ORD. DEPT., U. S. A.

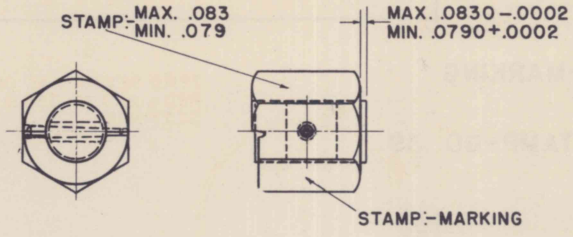

FLUSH PIN GAGE ASSEMBLY

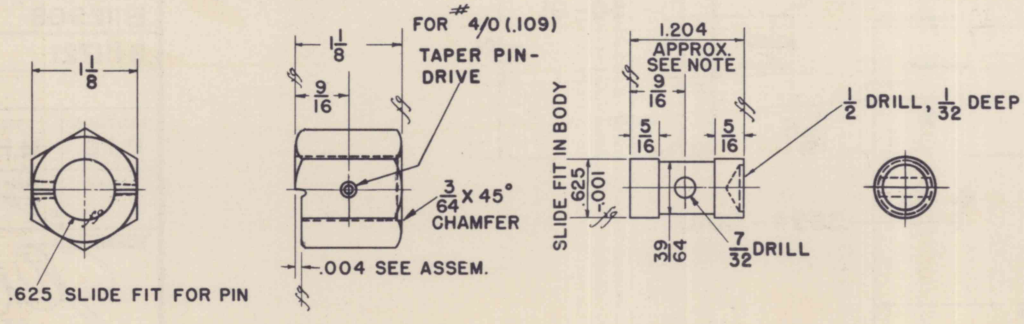

BODY
TOOL STEEL
FINISH ✓ HDN.
ALTERNATE DESIGN BODY 1 1/8 DIA. WITH FLAT FOR MARKING
1-#4/0 (.109) X 1. STEEL TAPER PIN

PIN
TOOL STEEL
FINISH ✓ HDN.

ROCKWELL HARDNESS C63 TO 66
LAP fg SURFACES
REMOVE ALL SHARP EDGES

SUPERSEDES OLD TRACING B21725 UNDER REVISION DATE OF 9-30-39

REVISIONS

COMPONENT		GAGE
DRAWING NO.	DATE	DATE
71-2-100	9-11-39	
71-2-96	8-3-39	9-30-39

DRAWING PERTAINS TO
B111721 GAGE LISTS
B112908

DRAFTSMAN	TRACER	L'D'G DRAFTSMAN
C.J.S.	M.H.E.	
CHECKER	CHECKER	CHIEF DRAFTSMAN

SUBMITTED:-
CAPT. ORD. DEPT., U. S. A.

APPROVED BY ORDER OF THE CHIEF OF ORDNANCE
MAJOR ORD. DEPT., U. S. A.

FRANKFORD ARSENAL
DATE JUNE 11, 1928

B21725

MARKING:- 37 M.M. CART. CASE M16 & M17, 71-2-96, 71-2-100, THICKNESS WALL .055, INSP.
B21726 , ORD. DEPT., U. S. A.

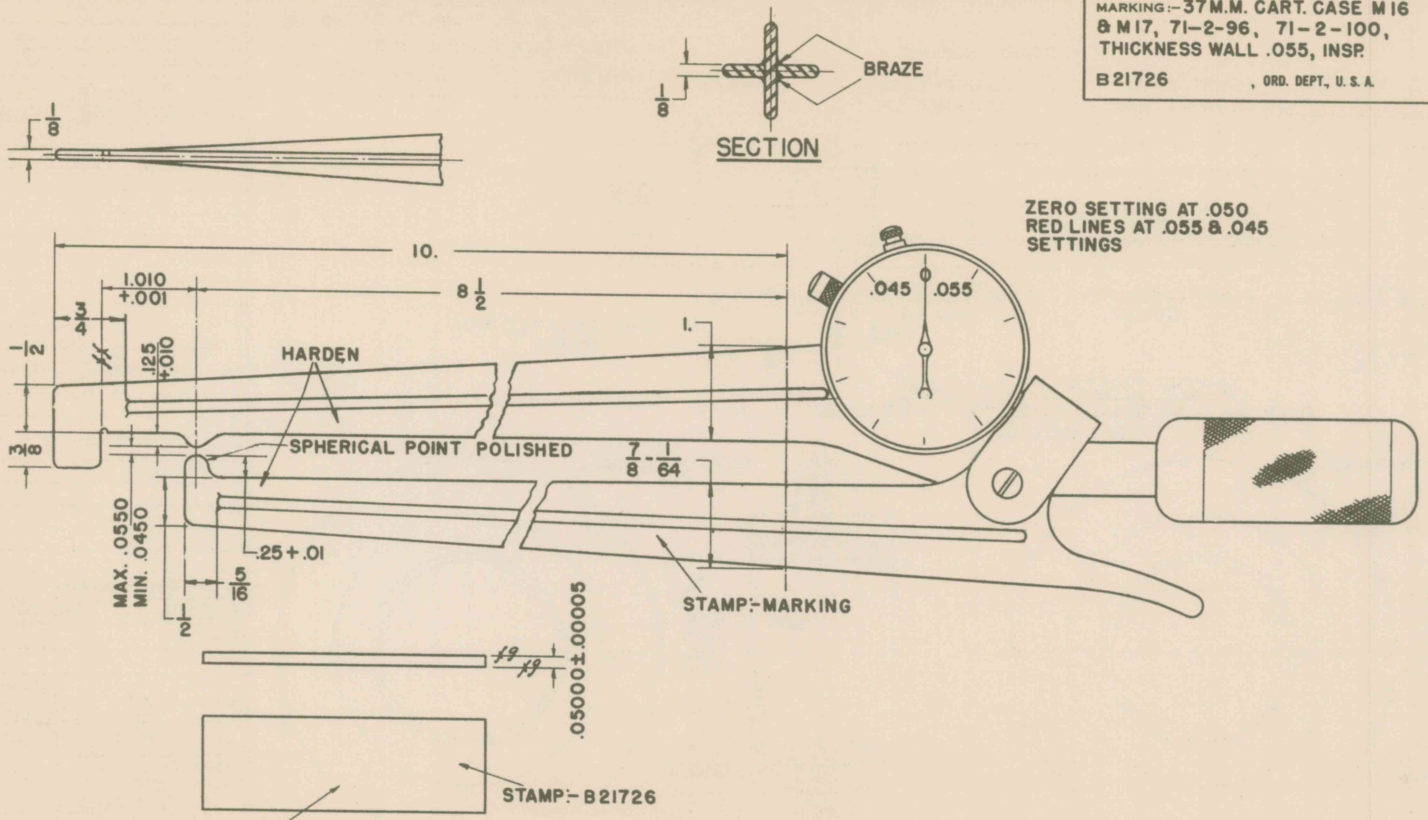

CALIPER GAGE

FEDERAL MODEL #49 OR EQUAL - INDICATOR C21 OR EQUAL
SPECIAL DIAL MARKED WITH MAX. & MIN. SETTING

SETTING PLUG

SWEDISH TYPE GAGE BLOCK

ROCKWELL HARDNESS C63 TO 66
LAP fg SURFACES
REMOVE ALL SHARP EDGES

REVISIONS		
COMPONENT		GAGE
DRAWING NO.	DATE	DATE
71-2-96	8-3-39	
71-2-100	~~9-11-39~~	9-30-39
	~~4-18-40~~	4-19-40

DRAWING PERTAINS TO
B112908 GAGE LISTS
B111721

DRAFTSMAN	TRACER	L'D'G DRAFTSMAN
E.J.K.	M.H.E.	
CHECKER	CHECKER	CHIEF DRAFTSMAN

SUBMITTED:
CAPT. ORD. DEPT., U. S. A.

APPROVED BY ORDER OF THE CHIEF OF ORDNANCE
MAJOR ORD. DEPT., U. S. A.

FRANKFORD ARSENAL

DATE SEPT. 30, 1939.

B21726

MARKING:- 37 M.M. CART. CASE,
M17 & M16, 71-2-100 & 71-2-96
DIA. UNDER FLANGE, INSP.
B 21727 , ORD. DEPT., U. S. A.

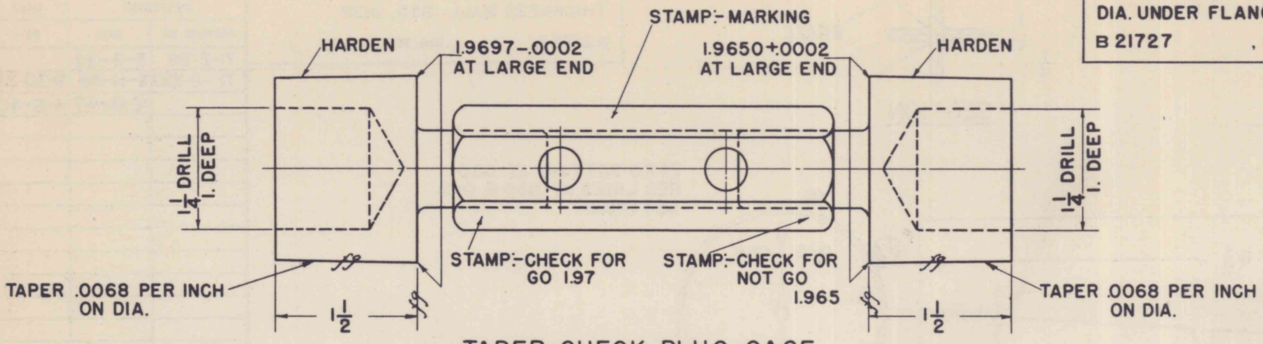

TAPER CHECK PLUG GAGE

AMERICAN GAGE DESIGN STANDARD — TAPER LOCK
EXCEPT AS SHOWN

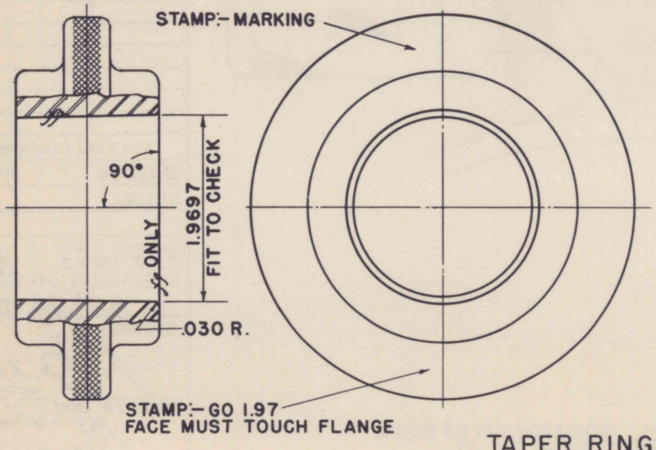

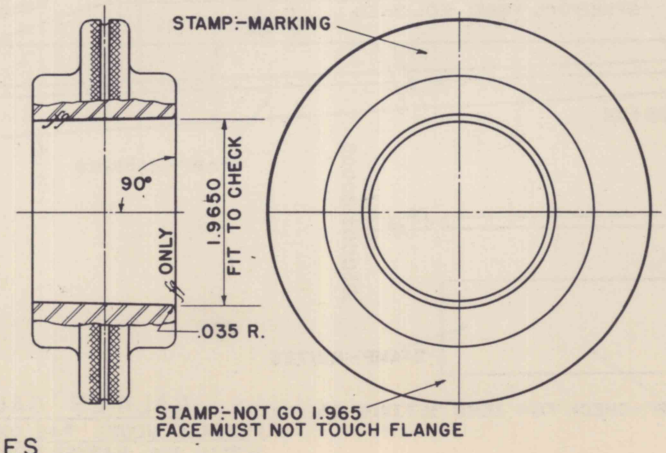

TAPER RING GAGES

AMERICAN GAGE DESIGN STANDARD
HARDEN

ROCKWELL HARDNESS C63 TO 66
LAP fg SURFACES
REMOVE ALL SHARP EDGES

SUPERSEDES A 52354 UNDER
REV. DATE OF 9-30-39

REVISIONS

COMPONENT		GAGE
DRAWING NO.	DATE	DATE
71-2-96	8-3-39	
71-2-100	9-11-39	9-30-39

DRAWING PERTAINS TO
B112908 GAGE LISTS
B111721

DRAFTSMAN	TRACER	L'D'G DRAFTSMAN
W.M.&M.	M.H.E.	
CHECKER	CHECKER	CHIEF DRAFTSMAN

SUBMITTED:
CAPT. ORD. DEPT., U. S. A.

APPROVED BY ORDER OF THE
CHIEF OF ORDNANCE
MAJOR ORD. DEPT., U. S. A.

FRANKFORD ARSENAL
DATE SEPT. 30, 1939

B 21727

SUPERSEDES B111721 UNDER REVISION DATE OF 9-30-39

COMPONENT		GAGE			
DRAWING	NAME	FUNCTION	OPER. NO.	TYPE	DRAWING
71-2-100	CASE, CARTRIDGE	MAX. PROFILE		CHAMBER	D10112-1
		CHECK FOR ALIGNMENT		ALIGNM'T. PLUG	D10112-1
		LIMIT CHECK TOP OF BODY		TAPER PLUG	D10112-2
		LIMIT CHECK BOT. OF BODY		TAPER PLUG	D10112-2
		LIMIT CHECK SHOULDER		TAPER PLUG	D10112-2
		LIMIT CHECK NECK		PLAIN PLUG	D10112-2
		DIA. UNDER FLANGE GO		TAPER RING	B21727
		DIA. UNDER FLANGE NOT GO		TAPER RING	B 21727
		CHECK FOR GO & NOT GO		D.E. TAPER PLUG	B 21727
		DIA. FLANGE		ADJ. SNAP	A 52351
		THICKNESS FLANGE		SNAP	A 52352
		DIA. EXTRACTOR GROOVE		SNAP	A 52358
		WIDTH EXTRACTOR GROOVE		TEMPLATE	A 52353
		THICKNESS BASE		FLUSH PIN	C 10785
		DIA. PRIMER HOLE		TAPER PLUG	A 52356
		DIA. PRIMER HOLE C'BORE.		D.E. PLAIN PLUG	A 52357
		DEPTH PRI. HOLE C'BORE.		FLUSH PIN	B 21725
		INSIDE DIA. AT MOUTH		PROG. PLUG	A 52361
		THICK. WALL AT MOUTH		ADJ. SNAP	A 52355
		THICK. WALL .055		CALIPER. IND.	B 21726
		CONC. PRIMER HOLE		INDICATOR	C 10786
		TOTAL LENGTH		SNAP	A 52359
		LENGTH PRIMER BOSS		SNAP	A 52363

DRAFTSMAN | TRACER W.F. | L'D'G DRAFTSMAN

CHECKER | CHECKER | CHIEF DRAFTSMAN

SUBMITTED:

APPROVED:- BY ORDER OF THE CHIEF OF ORD.
CAPT., ORD. DEPT., U. S. A.

DATE JUNE 11, 1928.
W.A.J. ORD. DEPT., U. S. A.

B 111721

SHEET No. 1 OF 1

REVISIONS

9-30-39

FILE

GAGE LIST FOR;

CASE, CARTRIDGE
37 MM. M17
INSPECTION

FRANKFORD ARSENAL

Frankford Arsenal—9-10-24—1,000.

COMPONENT		GAGE			
DRAWING	NAME	FUNCTION	OPER. NO.	TYPE	DRAWING
71-2-96	CASE, CARTRIDGE	MAX. PROFILE		CHAMBER	D 10118-1
		CHECK FOR ALIGNMENT		ALIGNM'T. PLUG	D 10118-1
		LIMIT CHECK TOP OF BODY		TAPER PLUG	D 10118-2
		LIMIT CHECK BOT. OF BODY		TAPER PLUG	D 10118-2
		LIMIT CHECK SHOULDER		TAPER PLUG	D 10118-2
		LIMIT CHECK NECK		PLAIN PLUG	D 10118-2
		DIA. UNDER FLANGE GO		TAPER RING	B 21727
		DIA. UNDER FLANGE NOT GO		TAPER RING	B 21727
		CHECK FOR GO & NOT GO		D.E. TAPER PLUG	B 21727
		DIA. FLANGE		ADJ. SNAP	A 52362
		THICKNESS FLANGE		SNAP	A 52352
		LENGTH PRIMER BOSS		SNAP	A 52363
		THICKNESS BASE		FLUSH PIN	C 10785
		DIA. PRIMER HOLE		TAPER PLUG	A 52356
		DIA. PRIMER HOLE C'BORE.		D.E. PLAIN PLUG	A 52357
		DEPTH PRI. HOLE C'BORE.		FLUSH PIN	B 21725
		INSIDE DIA. AT MOUTH		PROG. PLUG	A 52361
		THICK. WALL AT MOUTH		ADJ. SNAP	A 52355
		THICK. WALL .055		CALIPER-IND.	B 21726
		CONC. PRIMER HOLE		INDICATOR	C 10786
		TOTAL LENGTH		SNAP	A 52359

DRAFTSMAN	TRACER W.F.	L'D'G DRAFTSMAN	
CHECKER	CHECKER	CHIEF DRAFTSMAN	
SUBMITTED:			
APPROVED: BY ORDER OF THE CHIEF OF ORD.	CAPT. ORD. DEPT., U. S. A.	MAJ. ORD. DEPT., U. S. A.	
DATE SEPT. 30, 1939			
B 112908	SHEET No. 1 OF 1		

REVISIONS

GAGE LIST FOR;

CASE, CARTRIDGE 37 MM. M 16, INSPECTION

FRANKFORD ARSENAL

NOTE: FLUSH PIN TO BE FLUSH WITH STEPS FOR MAX & MIN. POSITIONS, ARM TO SLIDE FREELY WITHOUT SIDE PLAY.

MARKING: 37MM. CART. CASE M16 & M17, 71-2-96 & 71-2-100, THICKNESS BASE, INSP.
C10785 ORD. DEPT. U.S.A.

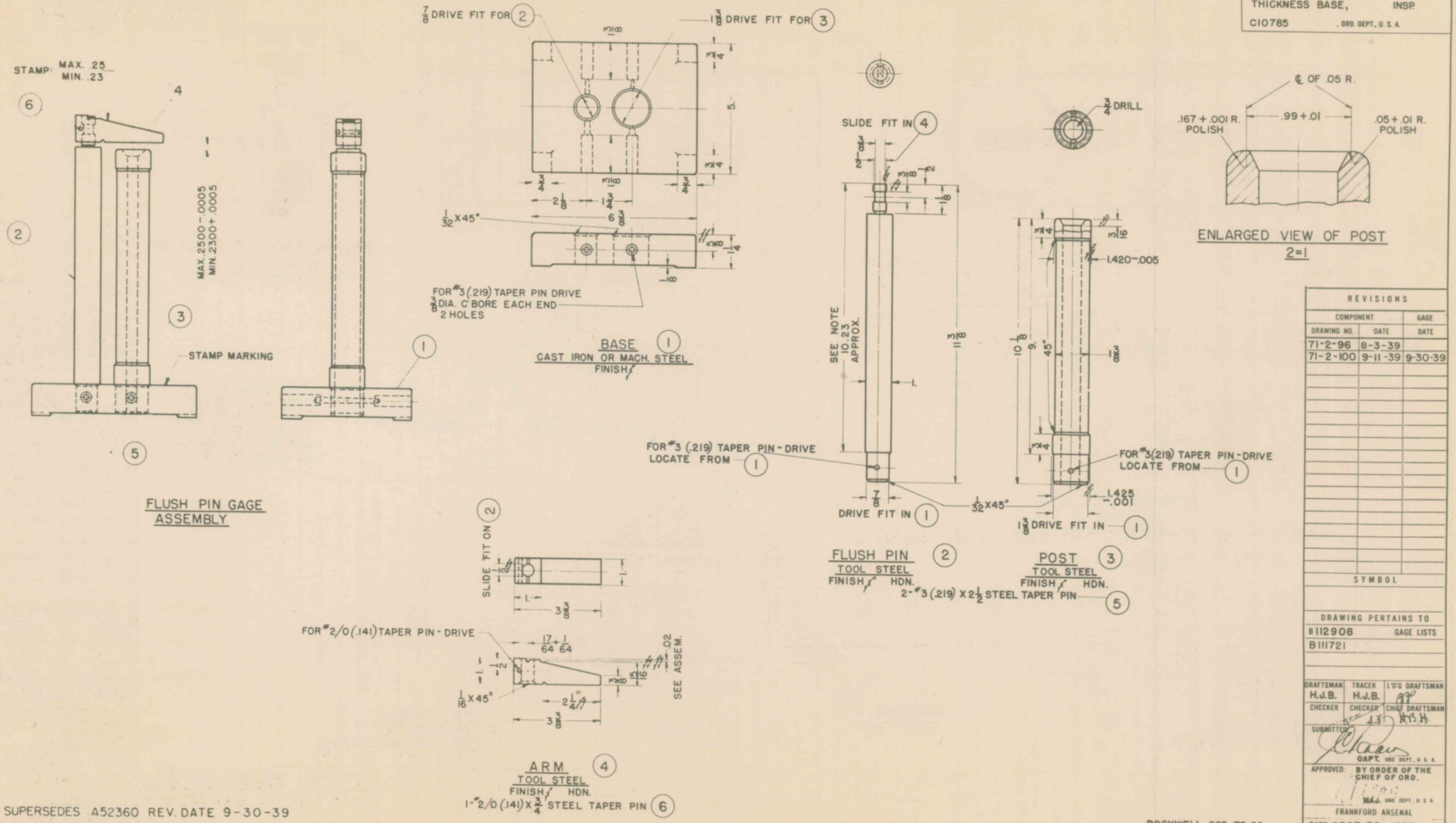

SUPERSEDES A52360 REV. DATE 9-30-39

ROCKWELL C63 TO 66
LAP for SURFACES
REMOVE ALL SHARP EDGES

REVISIONS		
COMPONENT		GAGE
DRAWING NO.	DATE	DATE
71-2-96	8-3-39	
71-2-100	9-11-39	9-30-39

SYMBOL

DRAWING PERTAINS TO
B112908 GAGE LISTS
B111721

DRAFTSMAN	TRACER	L'D'G DRAFTSMAN
H.J.B.	H.J.B.	
CHECKER	CHECKER	CHIEF DRAFTSMAN

SUBMITTED: CAPT. ORD. DEPT. U.S.A.

APPROVED: BY ORDER OF THE CHIEF OF ORD.
MAJ. ORD. DEPT. U.S.A.
FRANKFORD ARSENAL

DATE SEPT. 30, 1939.

C-10785

NOTE:-PLUG TO SLIDE FREELY WITHOUT SHAKE OR SIDEPLAY

MARKING:-- 37MM.CART. CASE M16 & M17, 71-2-96, 71-2-100 CONC. PRIMER HOLE, INSP.
C10786 . ORD. DEPT., U. S. A.

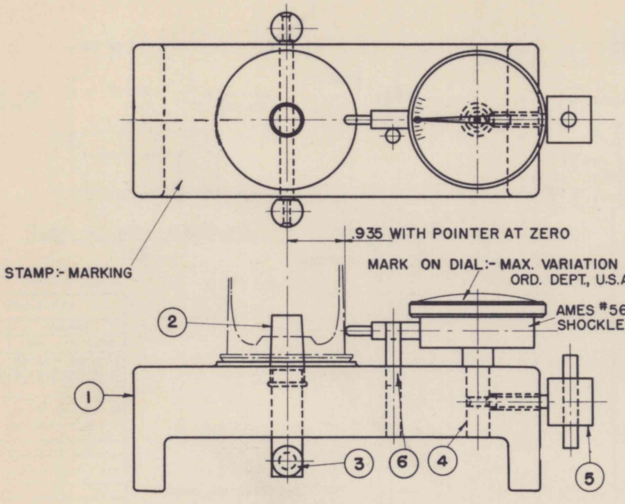

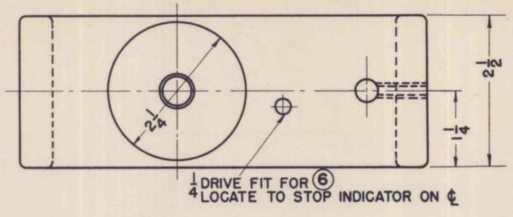

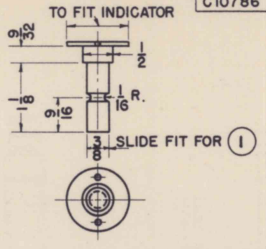

SPECIAL BACK FOR INDICATOR (4)
MACH. STEEL
FINISH ✓ -CASE HARDEN ϕ

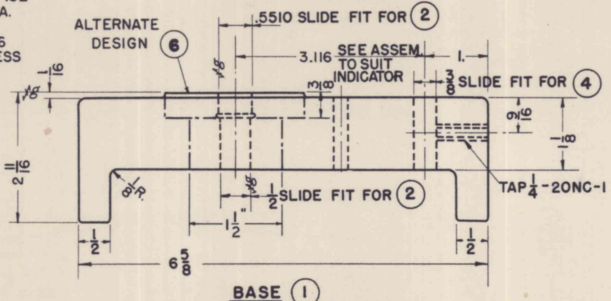

ALTERNATE DESIGN (6)
BASE-MACH. STEEL
FINISH -f- WITH TOOL STEEL BUSHING HARDENED & DRIVEN INTO BASE

CONCENTRICITY GAGE
ASSEMBLY
1-DIAL INDICATOR-JEWELED BEARINGS-BEZEL CLAMP-0-25-0-GRAD. .001 (AMES #56 SHOCKLESS SHOWN)

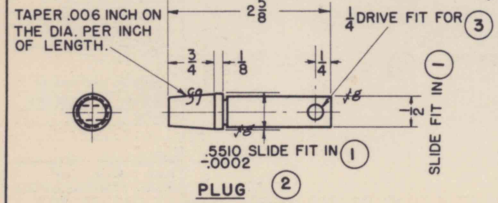

PLUG (2)
TOOL STEEL
FINISH ✓ -HARDEN ✱

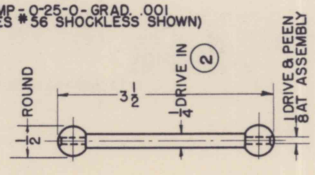

HANDLE (3)
1/4 DRILL ROD

BASE (1)
TOOL STEEL
FINISH ✓ -HARDEN ✱
1-1/4 X 1 DRILL ROD PIN 6

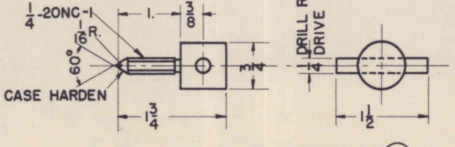

THUMB SCREW (5)
MACH. STEEL
FINISH ✓ -CASE HARDEN ϕ

ϕ ROCKWELL HARDNESS 15N90 MIN.
✱ ROCKWELL HARDNESS C63 TO 66

LAP ✓ SURFACES
REMOVE ALL SHARP EDGES

REVISIONS		
COMPONENT		GAGE
DRAWING NO.	DATE	DATE
71-2-96	8-3-39	
71-2-100	9-11-39	9-30-39

SYMBOL

DRAWING PERTAINS TO
B111721 GAGE LISTS
B112908

DRAFTSMAN	TRACER	L'D'G DRAFTSMAN
E. R. G.	C. H. K.	
CHECKER	CHECKER	CHIEF DRAFTSMAN

SUBMITTED: CAPT. ORD. DEPT., U. S. A.
APPROVED:-- BY ORDER OF THE CHIEF OF ORDNANCE
MAJ. ORD. DEPT., U. S. A.
FRANKFORD ARSENAL
DATE SEPT. 30, 1939
C-10786

MARKING:- 37M.M.CART. CASE, M17,
71 -2-100, MAX. PROFILE, INSP.
D-10112. ORD. DEPT. U.S.A.

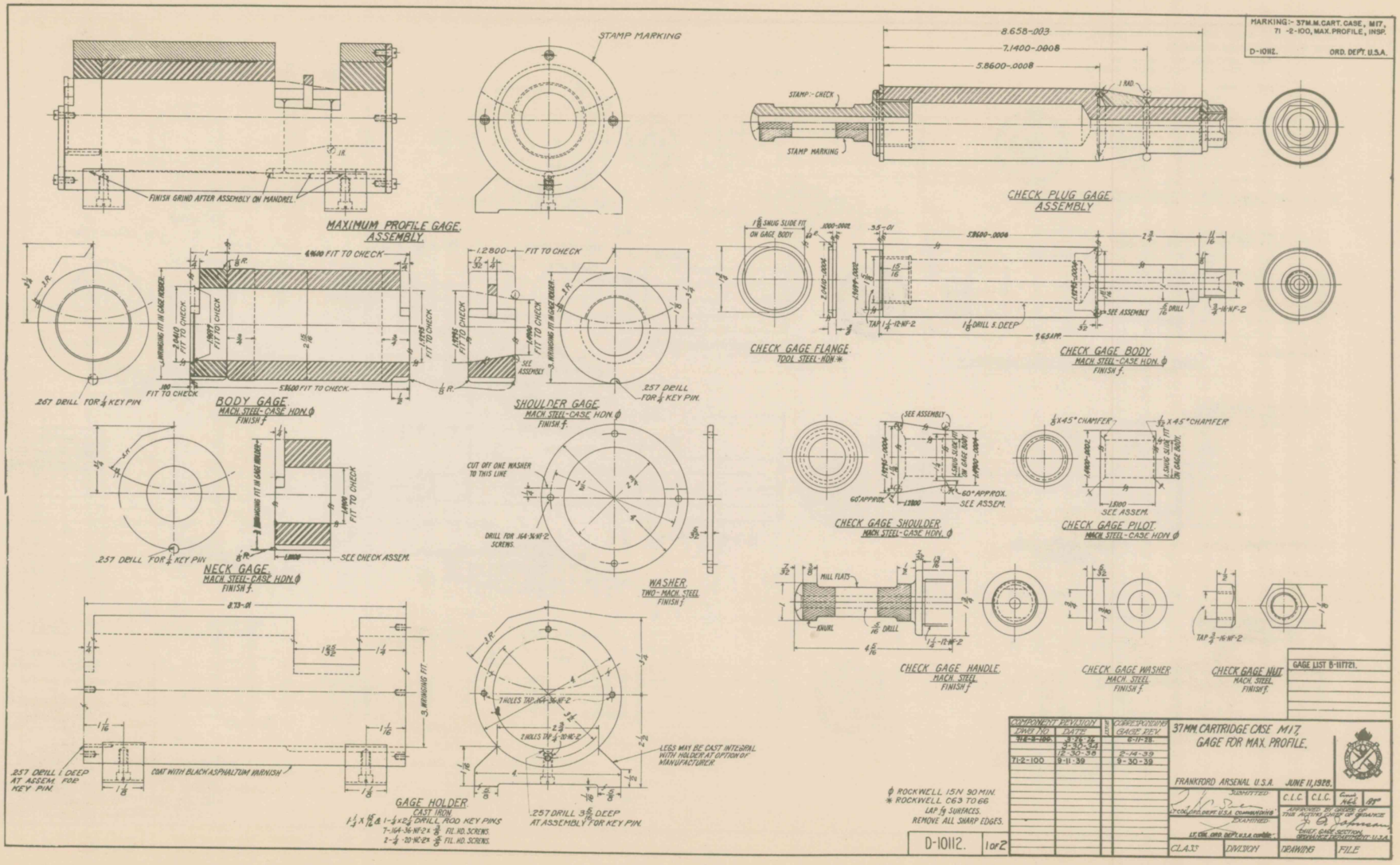

COMPONENT DEVIATION DWG. NO.	DATE		CONVENIENCE GAGE DEV.	
71-2-100	4-15-38		6-17-38	
	4-25-38			
	7-30-38		2-14-39	
71-2-100	9-11-39		9-30-39	

37 MM. CARTRIDGE CASE M17,
GAGE FOR MAX. PROFILE.

FRANKFORD ARSENAL U.S.A. JUNE 11, 1928.

SUBMITTED
Capt. ORD. DEPT. U.S.A. COMMANDING

DRAFTED
LT. COL. ORD. DEPT. U.S.A. COMMDG.

C.L.C. | C.L.C. | Capt. H.L.L. | BY

APPROVED BY ORDER OF THE AUTHORITY OF CHIEF OF ORDNANCE
J. G. Johnson
CHIEF, GAGE SECTION, ORDNANCE DEPARTMENT U.S.A.

CLASS | DIVISION | DRAWING | FILE

GAGE LIST B-111721.

NOTE:- FOR ACCEPTANCE ALL // SURFACES MUST BE TRUE & CONCENTRIC.
LEAVE PRECISION CENTERS IN HANDLES

MARKING:- 37 MM. CART. CASE, M17, 71-2-100, MAX. PROFILE, INSP. D 10112 ORD. DEPT., U. S. A.

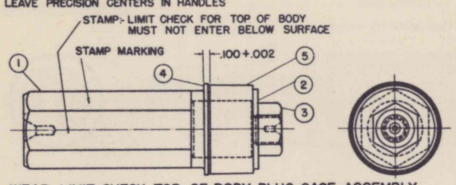

WEAR LIMIT CHECK TOP OF BODY PLUG GAGE ASSEMBLY

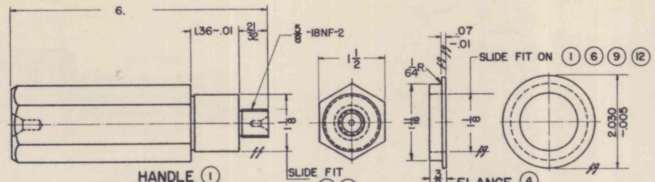

HANDLE (1)
MACH. STEEL-FINISH //
1-1 3/4 O.D. X 3/8 I.D. X 1/8 THICK STEEL WASHER (2)
1-3/8-18 NF-2 X 35/64 HEX. NUT (3)

FLANGE (4)
FOUR-TOOL STEEL-FINISH //-HARDEN ⊕

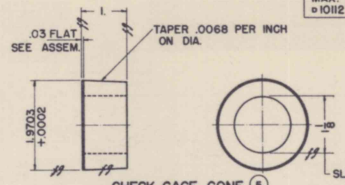

CHECK GAGE CONE (5)
TOOL STEEL-FINISH //-HARDEN ⊕

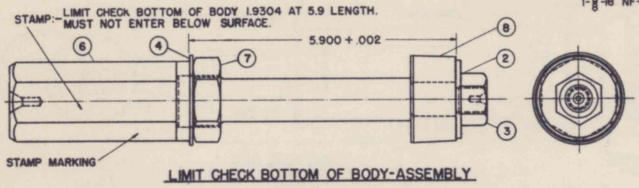

LIMIT CHECK BOTTOM OF BODY-ASSEMBLY

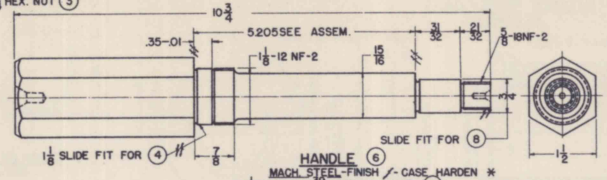

HANDLE (6)
MACH. STEEL-FINISH //-CASE HARDEN *
1-1 1/8-12NF-2 X 39/64 THICK JAM NUT (7)
1-1 3/4 O.D. X 3/8 I.D. X 1/8 THICK STEEL WASHER (2)
1-3/8-18 NF-2 X 35/64 HEX. NUT (3)

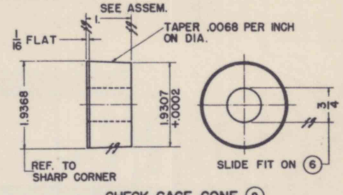

CHECK GAGE CONE (8)
TOOL STEEL ⊕
FINISH //-HARDEN

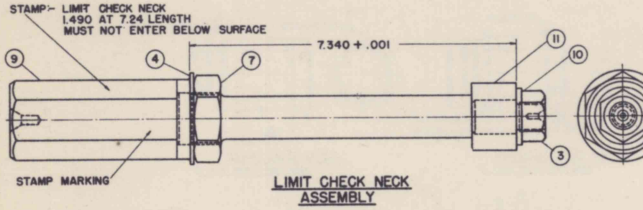

LIMIT CHECK NECK ASSEMBLY

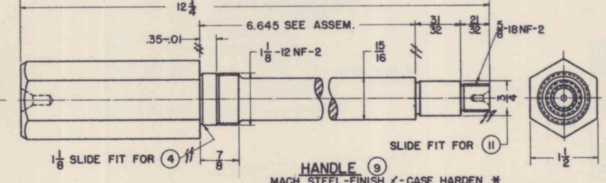

HANDLE (9)
MACH. STEEL-FINISH //-CASE HARDEN *
1-1 1/8-12NF-2 X 39/64 THICK JAM NUT (7)
1-1 1/4 O.D. X 3/8 I.D. X 1/8 THICK STEEL WASHER (10)
1-3/8-18 NF-2 X 35/64 HEX. NUT (3)

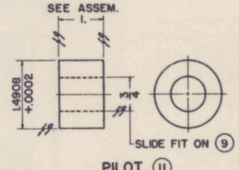

PILOT (11)
TOOL STEEL
FINISH // -HARDEN ⊕

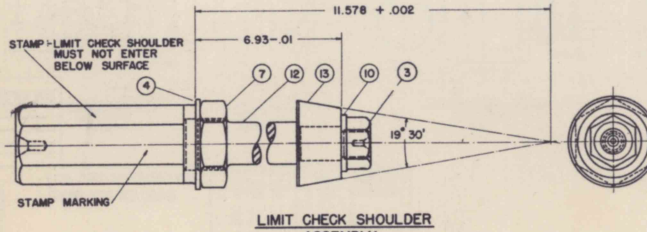

LIMIT CHECK SHOULDER ASSEMBLY

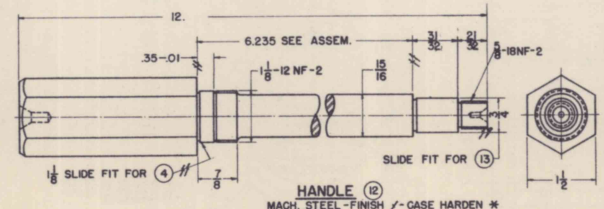

HANDLE (12)
MACH. STEEL-FINISH //-CASE HARDEN *
1-1 1/8-12 NF-2 X 39/64 THICK JAM NUT (7)
1-1 1/4 O.D. X 3/8 I.D. X 1/8 THICK STEEL WASHER (10)
1-3/8-18 NF-2 X 35/64 HEX. NUT (3)

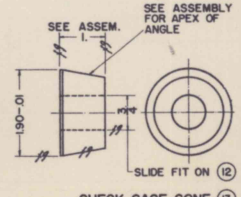

CHECK GAGE CONE (13)
TOOL STEEL
FINISH // -HARDEN ⊕

* HDN. 1/16 MIN. DEPTH.
18 ⊕ ROCKWELL HDN. ISN 90 MIN.
⊕ ROCKWELL HARDNESS C63-66.
LAP ⅞ SURFACES
REMOVE ALL SHARP EDGES

REVISIONS		
COMPONENT		GAGE
DRAWING NO.	DATE	DATE
71-2-100	9-1-39	9-30-39

SYMBOL

DR'G. PERTAINS TO
811172 GAGE LIST 9

DRAFTSMAN	TRACER	LYN. STONE
W. MCM	W.F.	GT
CHECKER		

SUBMITTED: CAPT., ORD. DEPT., U. S. A.
APPROVED BY ORDER OF THE CHIEF OF ORDNANCE: MAJ. GEN., ORD. DEPT., U. S. A.
FRANKFORD ARSENAL
DATE SEPT. 30, 1939.
D10112-2 2 OF 2

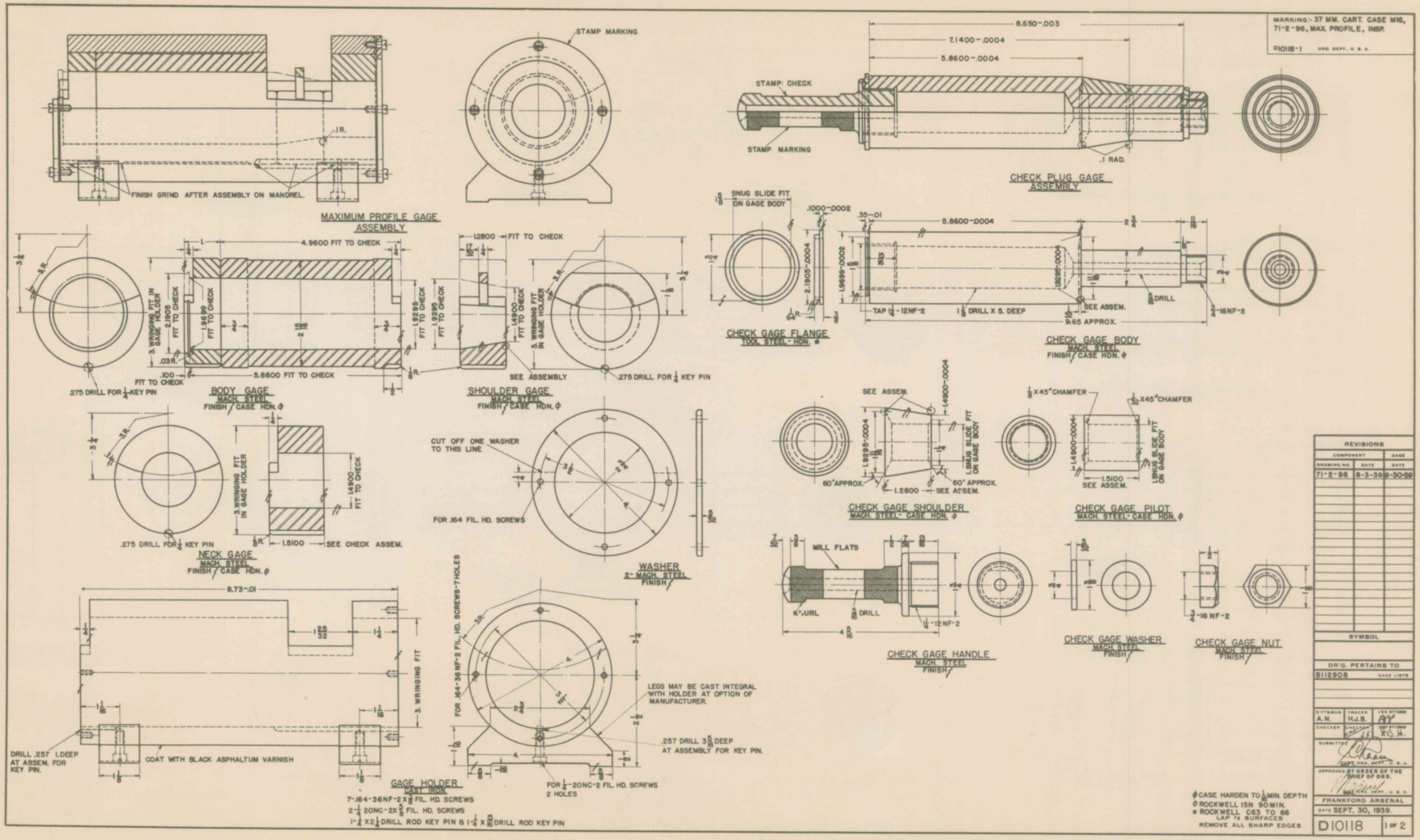
MARKING:- 37 MM. CART. CASE M16, 71-2-96, MAX. PROFILE, INSP.
D10118-1 ORD. DEPT., U. S. A.
MAXIMUM PROFILE GAGE ASSEMBLY
FINISH GRIND AFTER ASSEMBLY ON MANDREL.
STAMP MARKING
CHECK PLUG GAGE ASSEMBLY
STAMP: CHECK
STAMP MARKING
.1 RAD.
8.650-.003
7.1400-.0004
5.8600-.0004
BODY GAGE
MACH. STEEL
FINISH / CASE HDN. ϕ
4.9600 FIT TO CHECK
5.8600 FIT TO CHECK
FIT TO CHECK
.275 DRILL FOR 1/4 KEY PIN
SHOULDER GAGE
MACH. STEEL
FINISH / CASE HDN. ϕ
SEE ASSEMBLY
CHECK GAGE FLANGE
TOOL STEEL - HDN. ϕ
SNUG SLIDE FIT ON GAGE BODY
CHECK GAGE BODY
MACH. STEEL
FINISH / CASE HDN. ϕ
TAP 1/2-12NF-2
1 1/8 DRILL X 5. DEEP
SEE ASSEM.
9.65 APPROX.
1/4-16NF-2
NECK GAGE
MACH. STEEL
FINISH / CASE HDN. ϕ
SEE CHECK ASSEM.
CUT OFF ONE WASHER TO THIS LINE
FOR .164 FIL. HD. SCREWS
WASHER
2-MACH. STEEL
FINISH
CHECK GAGE SHOULDER
MACH. STEEL - CASE HDN. ϕ
60° APPROX.
SEE ASSEM.
CHECK GAGE PILOT
MACH. STEEL - CASE HDN. ϕ
1/8 X 45° CHAMFER
1/16 X 45° CHAMFER
1.5100 SEE ASSEM.
CHECK GAGE HANDLE
MACH. STEEL
FINISH
MILL FLATS
KNURL
DRILL
CHECK GAGE WASHER
MACH. STEEL
FINISH
CHECK GAGE NUT
MACH. STEEL
FINISH
8.73-.01
3. WRINGING FIT
DRILL .257 1. DEEP AT ASSEM. FOR KEY PIN.
COAT WITH BLACK ASPHALTUM VARNISH
GAGE HOLDER
CAST IRON
7-.164-36NF-2 X 3/8 FIL. HD. SCREWS
2-1/4 20NC-2 X 5/8 FIL. HD. SCREWS
1-1/4 X 2 1/2 DRILL ROD KEY PIN & 1-1/4 X 5/8 DRILL ROD KEY PIN
FOR .164-36NF-2 FIL. HD. SCREWS-7 HOLES
LEGS MAY BE CAST INTEGRAL WITH HOLDER AT OPTION OF MANUFACTURER.
.257 DRILL 3 5/8 DEEP AT ASSEMBLY FOR KEY PIN.
FOR 1/4-20NC-2 FIL. HD. SCREWS 2 HOLES
ϕ CASE HARDEN TO 1/16 MIN. DEPTH
ϕ ROCKWELL 15N 90 MIN.
* ROCKWELL C63 TO 66
LAP 7# SURFACES
REMOVE ALL SHARP EDGES
REVISIONS
COMPONENT
GAGE
DRAWING NO.
DATE
71-2-96
8-3-39
9-30-39
SYMBOL
DR'G. PERTAINS TO
811290B
GAGE LIST
D. T. SMALL
A. N.
TRACER
H. J. B.
CHECKER
SUBMITTED
CAPT. ORD. DEPT. U. S. A.
APPROVED BY ORDER OF THE CHIEF OF ORD.
MAJ. ORD. DEPT., U. S. A.
FRANKFORD ARSENAL
DATE SEPT. 30, 1939
D10118
1 OF 2

NOTE: FOR ACCEPTANCE ALL // DIAMETERS MUST BE TRUE AND CONCENTRIC. LEAVE PRECISION CENTERS IN HANDLES

MARKING:-37MM. CART CASE M15, 71-2-96, MAX. PROFILE, INSP.

D10118 ORD. DEPT., U. S. A.

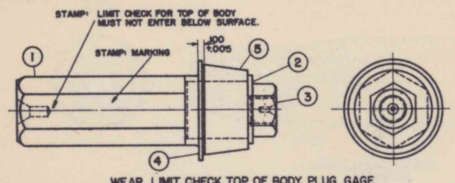

WEAR LIMIT CHECK TOP OF BODY PLUG GAGE ASSEMBLY

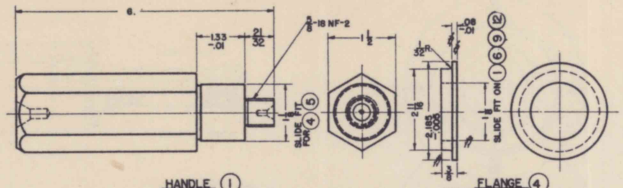

HANDLE (1)
MACH. STEEL
FINISH/
1-1 3/4 O.D. X 5/8 I.D. X 1/8 THICK STEEL WASHER (2)
1-5/8 - 18 NF-2 X 1. X 5/8 HEX. NUT (3)

FLANGE (4)
FOUR-TOOL STEEL
FINISH/HARDEN

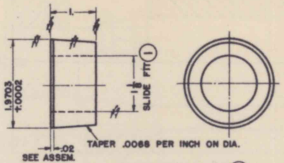

CHECK GAGE CONE (5)
TOOL STEEL
FINISH/HARDEN

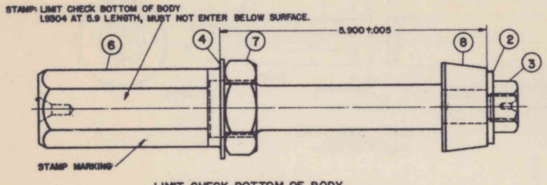

LIMIT CHECK BOTTOM OF BODY ASSEMBLY

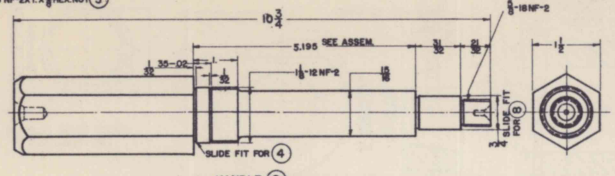

HANDLE (6)
MACH. STEEL
FINISH/
1-1 1/8 -12NF-2 X 1 11/16 X 5/8 JAM NUT (7)
1-1 3/4 O.D. X 5/8 I.D. X 1/8 THICK STEEL WASHER (2)
1-5/8 - 18 NF-2 X 1. X 5/8 HEX. NUT (3)

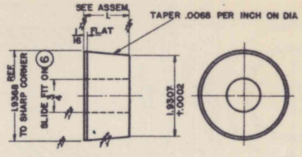

CHECK GAGE CONE (8)
TOOL STEEL
FINISH/HARDEN

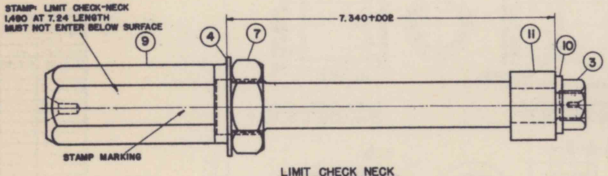

LIMIT CHECK NECK ASSEMBLY

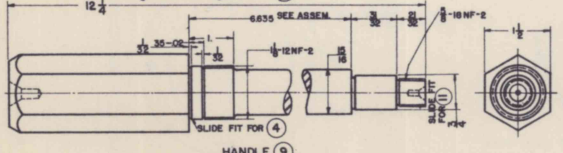

HANDLE (9)
MACH. STEEL
FINISH/
1-1 3/4 O.D. X 5/8 I.D. X 1/8 THICK STEEL WASHER (10)
1-1 1/8 -12NF-2 X 1 11/16 X 5/8 JAM NUT (7)
1-5/8 - 18 NF-2 X 1. X 5/8 HEX. NUT (3)

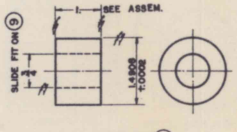

PILOT (11)
TOOL STEEL
FINISH/HARDEN

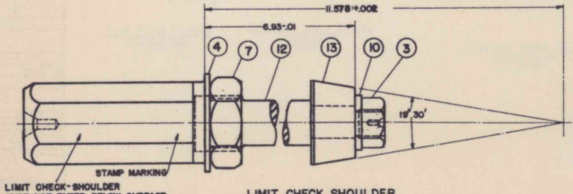

LIMIT CHECK SHOULDER ASSEMBLY

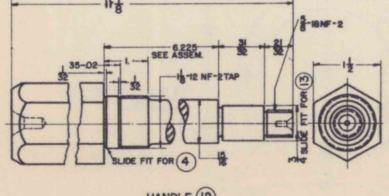

HANDLE (12)
MACH. STEEL
FINISH/
1-1 1/8 -12NF-2 X 1 11/16 X 5/8 JAM NUT (7)
1-1 1/4 O.D. X 5/8 I.D. X 1/8 THICK STEEL WASHER (10)
1-5/8 - 18 NF-2 X 1. X 5/8 HEX. NUT (3)

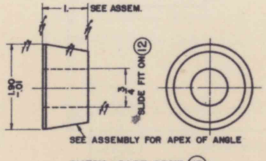

CHECK GAGE CONE (13)
TOOL STEEL
FINISH/HARDEN

ROCKWELL C63 TO 66
LAP ½ SURFACES
REMOVE ALL SHARP EDGES

REVISIONS		
COMPONENT		GAGE
DRAWING NO.	DATE	DATE
71-2-96	8-2-38	8-20-38

SYMBOL

DR'G. PERTAINS TO
B112908 GAGE LISTS

SYTESMAN	TRACER	LYN SYTESMAN
E.R.G.	H.J.B.	C.D.N.
CHECKER	CHECKER	ORD. ENGR.
	C.D.N.	J. SKIVINSKI

SUBMITTED: Chief, ORD. DEPT., U. S. A.

APPROVED BY ORDER OF THE CHIEF OF ORD.
Major, Ord. Dept., U. S. A.

FRANKFORD ARSENAL

DATE SEPT. 30, 1938.

D10118 2 OF 2

PHOTO-LITHOGRAPHED
AT
FRANKFORD ARSENAL
PHILADELPHIA, PA.